Grand Valley State University
ScholarWorks@GVSU

Watershed Management Plans and Reports | Annis Water Resources Institute

9-30-2002

On-Site Sewage Disposal Systems & Septage Management for Individual Homes and Small Communities

James R. Hegarty
Prein & Newhof

Follow this and additional works at: http://scholarworks.gvsu.edu/wmpr

Part of the Natural Resources Management and Policy Commons

Recommended Citation
Hegarty, James R., "On-Site Sewage Disposal Systems & Septage Management for Individual Homes and Small Communities" (2002). *Watershed Management Plans and Reports.* Paper 1.
http://scholarworks.gvsu.edu/wmpr/1

This Article is brought to you for free and open access by the Annis Water Resources Institute at ScholarWorks@GVSU. It has been accepted for inclusion in Watershed Management Plans and Reports by an authorized administrator of ScholarWorks@GVSU. For more information, please contact scholarworks@gvsu.edu.

ON-SITE SEWAGE DISPOSAL SYSTEMS

&

SEPTAGE MANAGEMENT

FOR

INDIVIDUAL HOMES AND SMALL COMMUNITIES

RECOMMENDED KENT COUNTY MANAGEMENT PROGRAM

Authored by:

James R. Hegarty, P.E.

Prein & Newhof

Prepared for

The Regional Environmental Planning Agency

Grand Valley Metro Council

September 30, 2002

ACKNOWLEDGEMENTS

The author together with the Annis Water Resources Institute of Grand Valley State University wish to recognize the contribution made by numerous individuals and organizations as part of the Kent County Septage Management Program.

This project was made possible with funds provided by the US Environmental Protection Agency as authorized by Section 319 of the Clean Water Act. The Nonpoint Source Program Unit, Surface Water Quality Division, Michigan Department of Environmental Quality administered this project. Our special thanks go to Janice L. Tompkins, Environmental Quality Analyst, Surface Water Quality Division, for her assistance throughout the project.

Those members of the Kent County Septage Management Program Advisory committee included the following:

Judy Barnes	Home & Building Association of Greater Grand Rapids
Andy Bowman	Grand Valley Metro Council
Matthew Campbell	MDEQ - Surface Water Quality Division
Jerry Felix	Grand Valley Metro Council
Tom Frazier	Michigan Townships Association
Jim Hegarty	Prein & Newhof
Curt Kemppainen	Kent County DPW
John Koches	Annis Water Resources Institute
Dave Kraker	Kent County Health Department
Corky Overmyer	City of Grand Rapids EPSD
Dick Plummer	Plummer's Septic Tank, Inc
Julie Rietberg	Grand Rapids Association of Realtors
Pat Staskiewicz	Ottawa County Road Commission
Donald Stypula	Michigan Municipal League
Janice Tompkins	MDEQ - Surface Water Quality Division
Dan Wolz	Wyoming Clean Water Plant
Ken Zarzecki	Ottawa County Public Utilities

This project has been funded wholly or in part by the United States Environmental Protection Agency under the assistance agreement to the Michigan Department of Environmental Quality. The contents of this document do not necessarily reflect the views and policies of the Environmental Protection Agency, nor does the mention of trade names or commercial products constitute endorsement or recommendation for use.

TABLE OF CONTENTS

Item	Page
1. Purpose	1
2. Problem Statement	2
3. What is Domestic Sewage?	4
4. Individual & Small-Community Sewage Collection & Treatment Systems	4
5. System Costs	18
6. Small-Community Sewage Collection Systems	19
7. Small-Community Sewage Treatment Systems	22
8. Treated Sewage Discharges	26
9. Common Recommended Management Practices for Septic Systems	28
10. Measures that Minimize a Septic System's Impact on the Environment	29
11. Existing OSDS Management Practices and Controls, Ordinances and Public Health Codes in Other Communities	36
12. Need for a Kent County OSDS Management Ordinance	45
13. Elements of a Successful Management Program	45
14. EPA Guidelines for Managing OSDSs	47
15. Key Elements of an Onsite/Decentralized Management Program	66
16. Recommendations for Kent County	83
17. References	87

FIGURES & TABLES

Figures **Page**

Fig. 4-1 Typical Residential Septic System 7

Fig. 4-2 Typical 'Mound' System 11

Fig. 4-3 Plan and Profile View of a Typical Intermittent Sand Filter System 12

Fig. 4-4 Typical Recirculating Sand Filter System 13

Fig. 4-5 Aeration Augmentation to a Septic Tank 14

Fig. 4-6 Typical Constructed Wetlands 15

Fig. 4-7 Drip Irrigation 16

Fig. 4-8 Spray Irrigation 17

Tables **Page**

Table 10-1 Kent County Septage Pumping Estimates 35

Table 14-1 Overview of EPA Model Program objectives and basic features 48

Table 14-2 Summary of EPA model program #1 49

Table 14-3 Summary of EPA model program #2 50

Table 14-4 Summary of EPA model program #3 51

Table 14-5 Summary of EPA model program #4 52

Table 14-6 Summary of EPA model program #5 53

Table 14-7 Key elements of an onsite/decentralized management program 54

Table 14-8 Model Program 1: System Inventory and Awareness of Maintenance Needs 56

Table 14-9 Model Program 2: Management Through Maintenance Contracts 58

Table 14-10 Model Program 3: Management Through Operating Permits 60

Table 14-11 Model Program 4: RME Operation and Maintenance 62

Table 14-12 Model Program 5: RME Ownership and Management 64

Table 15-1 Planning activities 67

Tables, cont'd. **Page**

Table 15-2 Performance requirements approaches 67
Table 15-3 Site evaluation approaches 68
Table 15-4 Site characterization and assessment activities for OSDS applications 69
Table 15-5 Design program approaches 70
Table 15-6 Construction/installation approaches 70
Table 15-7 Operation and maintenance approaches 71
Table 15-8 Residuals management approaches 71
Table 15-9 Certification and licensing approaches 72
Table 15-10 Public education and involvement approaches 72
Table 15-11 Inspection and monitoring approaches 73
Table 15-12 Corrective action approaches 73
Table 15-13 Compliance assurance approaches and their implications 74
Table 15-14 Record keeping and reporting approaches 75
Table 15-15 Financial assistance approaches 75
Table 15-16 Advantages and disadvantages of various funding sources 76
Table 15-17 General context for developing and implementing mgmt. actions 78
Table 15-18 Organizational, functional, and structural dimensions of mgmt. 80
Table 15-19 Organizational approaches, responsibilities, and other considerations in selecting a management entity 82

ON-SITE SEWAGE DISPOSAL SYSTEMS
&
SEPTAGE MANAGEMENT
FOR
INDIVIDUAL HOMES AND SMALL COMMUNITIES

RECOMMENDED KENT COUNTY MANAGEMENT PROGRAM

1. Purpose

The purpose of this paper is two-fold:

- To identify alternatives and/or improvements to conventional septic systems for residential sewage collection and treatment for small communities and residential developments.
- To research existing ordinances that require on-going management of residential and community septic systems, disposal of septage, and develop a model septic system and septage management ordinance that can apply to Kent County communities.

It is hoped that this study's recommendations will be adopted in Kent County. Eventually, Kent County's model program can be used to effect statewide implementation of responsible environmental policies that will improve our environment and public health. The desired outcomes of better management approaches are the protection of human health and welfare, and protection of water resources from disease-causing bacteria, nitrates in groundwater, and high nutrient and pollutant levels.

2. Problem Statement

Kent County continues to grow outward from its core city, Grand Rapids, and several major suburbs including Wyoming, Kentwood, and Grandville. Much of this growth is occurring beyond areas served by conventional domestic wastewater (sewage) collection and treatment systems. The most common form of domestic sewage collection and treatment for these outlying areas is the residential septic system, also known as an on-site sewage disposal system (OSDS). Since 1994, 21% of the OSDS permits issued by the Kent County Health Department were for repair or replacement of existing (failing) OSDSs. It is estimated that there are approximately 45,000 residential OSDSs in Kent County in 2002. It is acknowledged that OSDSs will likely continue to serve many of the growing areas in Kent County. It is important, however, to devise better management systems for both current and future OSDSs in Kent County and elsewhere.

About 30% of the nation's domestic sewage is treated via this method. The residential OSDS, while relatively cost-effective for homeowners, is comprised of 1950s technology. Even when properly designed, installed and maintained, a conventional septic system allows many harmful components of domestic sewage to enter the groundwater. These harmful substances include the nutrients nitrogen and phosphorus, disease-causing pathogens and many chemicals contained in household cleaners and solvents. System selection, design, and maintenance are critical to minimize adverse environmental and health impacts of OSDSs. Even under the best of circumstances septic systems allow a "planned release" of contaminants into the groundwater and they must be properly sited, designed constructed and managed to minimize the impact of such releases.

Estimates compiled by the Michigan Department of Environmental Quality (MDEQ) indicate that approximately 26,000,000 gallons of untreated sewage a day is discharged in Michigan from *failing* septic systems. Another 238,000,000 gallons of 'treated' sewage is discharged daily into Michigan's groundwater by the remainder of our state's septic systems. Projecting these state-wide figures to Kent County using US Census and MDEQ figures, *failing* septic systems discharge about 1,000,000 gallons a day, while the rest of Kent County's septic systems discharge almost 9,000,000 gallons a day of 'treated' sewage. Effectively managing these systems to ensure the protection of citizens and the environment has proven to be a challenge.

A 1998 GVSU/AWRI study of the Bear Creek watershed in Cannon Township confirmed water quality damage to the stream from failing septic systems. Similarly, a 1990s study of the Rouge River watershed in the Detroit area found improperly operated and failing septic systems to be a major contributor to water quality degradation.

To put today's challenges with OSDSs into perspective, consider that in 1925, 80 percent of all cities in the United States with populations exceeding 100,000 people had no treatment systems at all! At that time, deaths from water-borne diseases were not uncommon.

OSDSs offer an additional challenge for sewage plants and local officials. Septage (the liquid and solids periodically pumped from the bottom of septic tanks) is either collected and disposed of as 'fertilizer' on farms or is taken to a municipal sewage treatment plant. Unfortunately, even in cases where application on farms is done correctly, it is rarely applied at agronomic (appropriate to the crop's needs) rates as of this writing.

Septage is pumped from a septic tank, cesspool, or other treatment facility after it has accumulated over a period of time. A septic tank will usually retain 60 to 70% of the solids, oil, and grease that enter it. Scum accumulates on top while sludge settles at the bottom, comprising 20 to 50% of the total septic tank volume when pumped.

Septage has an offensive odor and appearance and contains significant levels of grease, grit, hair, and debris. It is a host for many disease-causing organisms. Some municipalities establish local regulations for septage handling, treatment, and disposal in addition to state and federal regulations.

With the exception of the City of Wyoming's sewage treatment plant, most local publicly owned treatment plants are incapable of accepting septage at the headworks because of the 'shock' loading it presents to the sewage treatment facility. It is considered a shock to a treatment plant because septage contains highly concentrated organic materials and in some cases contains metals that affect municipal discharge limits to receiving waters. Shock loadings can be reduced if the receiving plant creates a septic holding tank that 'bleeds' septage into the normal sewage flow or screens or filter presses the septage and introduces the solids directly to the anaerobic sludge digesters instead of introducing it at the headworks.

Environmental groups and agencies complain that septage application to farm lands is often done in an irresponsible and uncontrolled manner that results in environmental damage to local watersheds and poses public health hazards. Specifically, septage application to frozen land in the winter results in significant runoff of pollutants into surface waters compared with summer applications. Enforcement of laws applying to land application of septage has been difficult to enforce due to a shortage of MDEQ personnel to 'police' this activity.

Kent County's 2001 Urban Sprawl Subcommittee Report recommended adoption of the Septage Management program and changes to current sewage disposal regulations.

3. What is Domestic Sewage?

Domestic sewage consists of all liquids leaving a residential home and entering either a sewage collection system or septic tank. This includes not only the material flushed down toilets, but also water drained from showers and sinks, dishwashers, sink-mounted garbage disposals, floor drains, utility washtubs, and clothes washers. The contents of domestic sewage include any liquids, organic materials, and chemicals leaving a residence through any of the above-mentioned means.

Treated domestic sewage is called effluent.

4. Individual & Small-Community Sewage Collection & Treatment Systems

The following is a discussion of the various types of common sewage collection and treatment alternatives available to individual homes, small communities, and residential developments.

4.1. Septic Systems

First, it will be helpful to describe the common residential septic system, as many of the alternatives presented will be modifications to, or improvements upon, the system.

Septic systems serve the dual role of collecting and treating domestic sewage. Septic systems can act as pathways for nitrogen, phosphorus, organic matter, and bacterial and disease-causing pathogens to enter the groundwater through their normal functioning.

Inadequate design, inappropriate installation, neglectful operation, or exhausted life expectancy can increase and intensify an OSDS's negative effect on groundwater quality.

Septic system failure is defined as the occurrence of any or all of the following:

- When sewage backs up into the home or building.
- When sewage pools on the ground surface if the drain field is clogged or overloaded.
- When a system discharges directly to surface water.
- When a system discharges directly to a storm sewer.
- When a system contaminates the groundwater with nutrients, chemicals, and pathogens.
- When the septic tank is structurally defective or deteriorating.
- When a drain field is located too close to either a surface water body or the groundwater.

A defective septic system is one that:

- Is in non-conformance with separation distance from water wells.
- Is not accessible from the ground surface.

4.1.1. How septic systems work

Sewage leaving a residence is collected in a septic tank. Most residences have septic tanks capable of holding between 1,000 and 2,000 gallons of sewage. In the septic tank, the heavier solids portion of domestic sewage settles to the bottom of the septic tank where natural, anaerobic (no oxygen present) biological processes help decompose the solids in the sewage and allow it to be treated. Bacteria present in domestic sewage are sufficient to begin and sustain this biological process.

As the sewage flows through the septic tank, the liquid portion of the sewage rises to the top of the tank where it flows from the tank through a drainpipe connected to the top portion of the tank's sidewall. The sewage exiting the septic tank flows to a buried area on the resident's property known as a drain field. There, the pipe splits into several

perforated sections allowing the sewage in it to flow into the soil for final treatment and disposal.

In the soil, many of the organic elements of sewage continue to break down. Additional components of sewage are either absorbed (taken in) by the soil prohibiting its release to the groundwater, or adsorbed (joined to) onto soil particles.

Since subsurface soil treatment and disposal relies upon gradual seepage of sewage into the surrounding soils, these systems can only be considered where favorable soil characteristics exist for treatment and subsequent disposal of the treated sewage into the groundwater. Figure 4-1 shows the typical residential septic system, including the drain field, and a septic tank.

When a septic system fails, it results in raw sewage from individual homes running into groundwater or drainage ditches, local streams, lakes, and rivers, potentially exposing humans and pets to life-threatening pathogens.

What is really desired with a septic system is to prevent the effluent--or more correctly, the pollutants it contains--from causing water quality and public health problems when it gets to the groundwater and eventually to surface water. Unfortunately, as one will see in the following discussions, *prevention* is a difficult if not impossible task. *Management* is closer to reality.

Fig. 4-1 Typical Residential Septic System

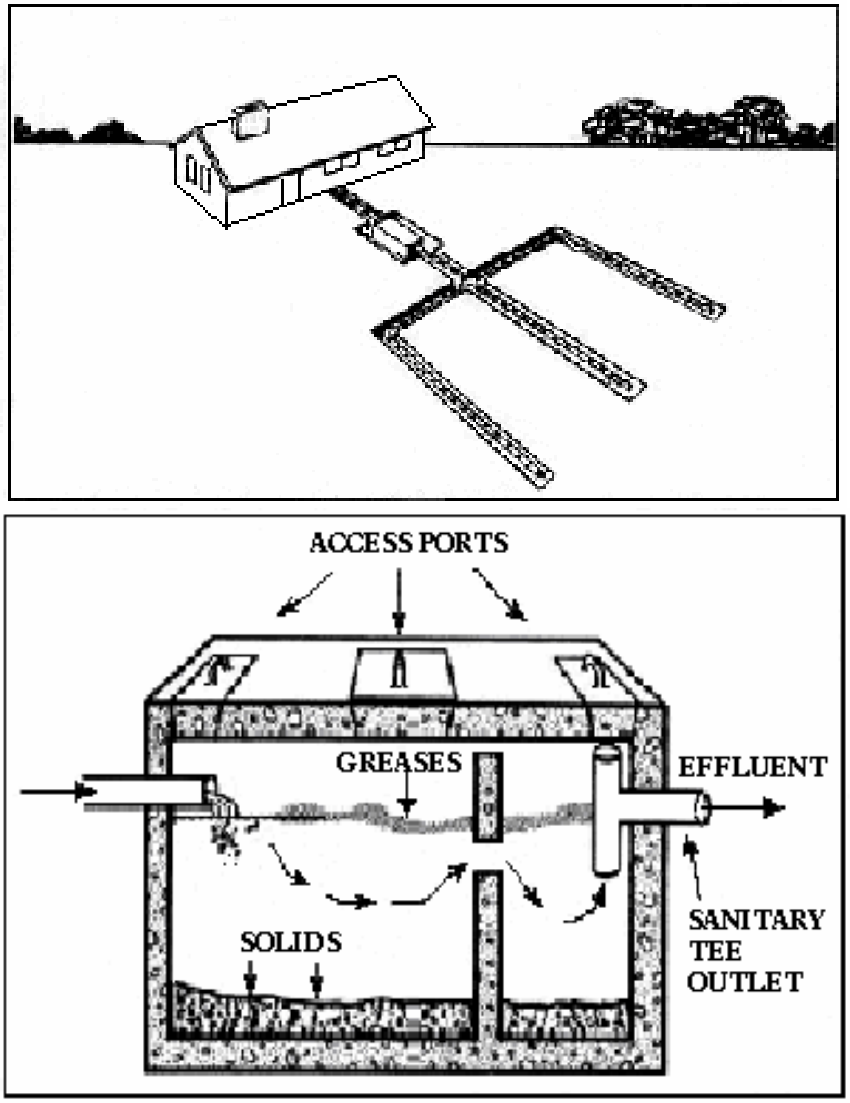

Septic systems work best when:

- The sewage reaching the drain field is partially treated.
- The drain field is of sufficient size to prevent hydraulic overloading.
- Its sewage loading rate is sufficiently low.
- The sewage loading is distributed uniformly over the drain field in alternating dosing and resting cycles.
- The septic tank is leak tested and waterproof.

Several of the modifications to septic systems described later apply one or a combination of these characteristics to sewage treatment.

4.1.2. Advantages of Septic Systems

- Low cost to install and maintain for the homeowner.
- Fairly liberal governmental regulations relative to their installation and maintenance.

4.1.3. Disadvantages of Septic Systems

- Septic systems are not suitable in heavy soils, near high groundwater tables, or in rock.
- Septic tanks must be pumped out every three to five years and inspected more frequently. Normally an organic 'mat' forms in the drain field, causing the soil to 'blind' itself and not allow sewage to percolate through it. The key to managing this organic 'mat' is to frequently pump the septic tank to minimize the build-up of organic material in the drain field.
- Septic systems generate septage, a very strong form of partially treated sewage, which is pumped from the septic tank each time it is maintained.
- 1920s treatment technology employed by septic systems allows release of nitrogen, phosphorus, and household chemicals to groundwater. Improperly functioning systems can also introduce disease-causing bacteria and viruses into the groundwater.
- Because most septic systems are not well maintained, their useful life is less than 20 years before replacement of the drain field and/or tanks is needed.
- Replacement of a failing system is an expense many homeowners postpone until the system no longer works. Homeowners may be unable to afford a replacement.
- Septic systems require a reasonably large land area for the drain field, and each newly permitted septic system must also dedicate space for a reserve drain field once the original system fails.
- Most septic systems are maintained by individual homeowners, many of who do not understand how a septic system works and how it must be maintained. The use of

household garbage disposals and pouring of grease down domestic drains can reduce the effectiveness of the septic tank and its associated drain fields.

- Hydraulic overloading has been identified as a major cause of system failure. In terms of system operation, as many as 75 percent of all system failures have been attributed to hydraulic overloading.

4.1.4. Pumping the Septic Tank

Every septic tank must eventually be pumped. The frequency of pumping depends on three things:

- Tank size
- Sewage volume
- Solids content in the sewage

The tank should be pumped if the sludge layer has built up to within 25 to 33 percent of the liquid capacity of the tank. If the homeowner uses a garbage disposal, the tank may need to be pumped more frequently.

4.2. Variations or Augmentations to Septic Systems

There are a number of variations to the basic septic system described above. They include:

4.2.1. Alternating bed systems
4.2.2. Pressure distribution systems
4.2.3. Mound systems
4.2.4. Intermittent sand filters
4.2.5. Recirculating sand filters
4.2.6. Aeration systems
4.2.7. Constructed wetlands and evapotranspiration systems
4.2.8. Drip irrigation systems
4.2.9. Spray irrigation systems

4.2.10. Community (as opposed to residential) systems comprised of conventional septic systems serving several homes combined with any of the above modifications to a conventional septic system.

With the exception of the mound system, these alternative systems typically try to provide better treatment to OSDS effluent before being discharged to a drain field, or further treatment to the drain field's effluent. Often, alternative systems require additional pumps and other moving parts and tanks, resulting in the need for a more advanced level of operation and maintenance expertise compared with a conventional septic system.

If these systems are proposed for community treatment, a qualified operator is needed as well as sufficient revenue from operation to cover system costs. If these systems are operated by a homeowner, the burden of understanding the system's operation and maintenance needs falls upon him. Without proper maintenance and operation, these systems are prone to failure.

4.3. Alternating Bed Systems

The most common reason for failure of the drain field is hydraulic overload. One retrofitting option involves construction of a backup absorption field, with the ability to route tank water to either field. The backup field is used while the primary field is rested and allowed to recover through biological activity. Fields are alternated typically every 6 months.

4.4. Pressure Distribution (Low-pressure Pipe) Systems

A storage tank and pump can be installed after the septic tank to more evenly distribute the septic tank effluent. More even distribution results in better soil treatment than the conventional gravity distribution method for a retrofitted system or the same treatment within a shallower soil for a new system.

4.5. Mound Systems

Mound systems are basically conventional septic systems constructed in an engineered 'mound' of earth fill above the natural ground surface. The 'mound' is built up to achieve a prescribed vertical separation from either groundwater or bedrock close under the ground surface. The earth fill in the 'mound' is of such composition as to allow for soil treatment of sewage that is equivalent to that found on an approved site for a conventional septic system. Mound systems are typically approved as a last resort by local Health Departments as replacement systems for failing conventional or mound septic systems. Rarely are they approved for new construction. A photo of a mound system is shown in Figure 4-2.

Fig. 4-2 Typical 'Mound' System

4.6. Intermittent Sand Filters

Intermittent sand filters (ISFs) are often used in areas where a conventional septic system could not be sited due to unsuitable soil. The use of this method is encouraged wherever lack of sufficient soil resources creates a concern about threats to the environment and public health from OSDSs.

Typically, native soils are removed and replaced with 'engineered' soils more conducive to OSDSs. As in a typical septic system, sewage first passes through a septic tank before it is discharged to the ISF's filtration bed. Rather than a continuous gravity feed as with septic

systems, sewage is 'dosed' via a pump, where it percolates through the pre-engineered soil filtration bed. From there it is either discharged directly to the native soil or to a surface water body. In Michigan a NPDES Permit is needed for a surface water discharge.

The effluent quality from ISFs is claimed to be a little better than that from a conventional septic system. ISFs do cost slightly more to install than a conventional septic system, and because they have moving parts and pre-engineered filtration material, they are more costly to operate and require more frequent maintenance. The major failure mode of ISFs is clogging of the bed. When this proceeds too far, water backs up in the system, which usually forces attention to the problem. A typical layout for an ISF is shown in Figure 4-3.

Fig. 4-3 Plan and Profile View of a Typical Intermittent Sand Filter System

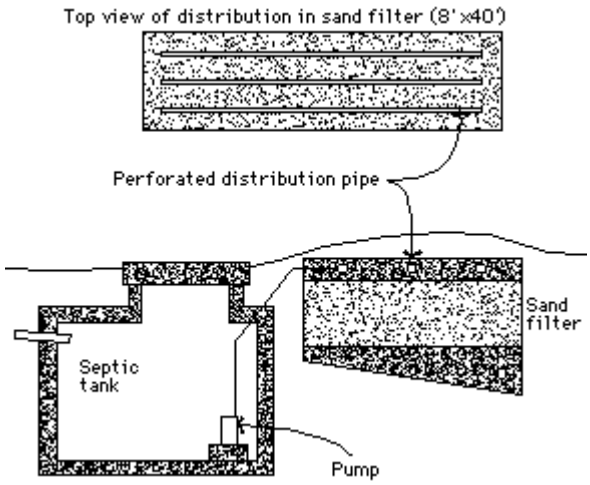

4.7. Recirculating Sand Filters

Similar to an ISF, a recirculating sand filter (RSF) allows sewage to flow from a septic tank to a recirculation chamber, where it then is routed over a sand filter bed as described for an ISF above. Effluent from the pre-engineered soil filtration bed is then routed back to the recirculation chamber, where it is mixed with incoming sewage from the septic tank and recirculated over the pre-engineered soil filtration bed. From there it is either

discharged directly to the native soil or to a surface water body. In Michigan a NPDES Permit is needed for a surface water discharge.

The effluent quality from RSFs is claimed to be a little better than that from a conventional septic system. RSFs do cost slightly more to install than a conventional septic system, and because they have moving parts and pre-engineered filtration material, they are more costly to operate and require more frequent maintenance. A typical RSF system is shown in Figure 4-4.

Fig. 4-4 Typical Recirculating Sand Filter System

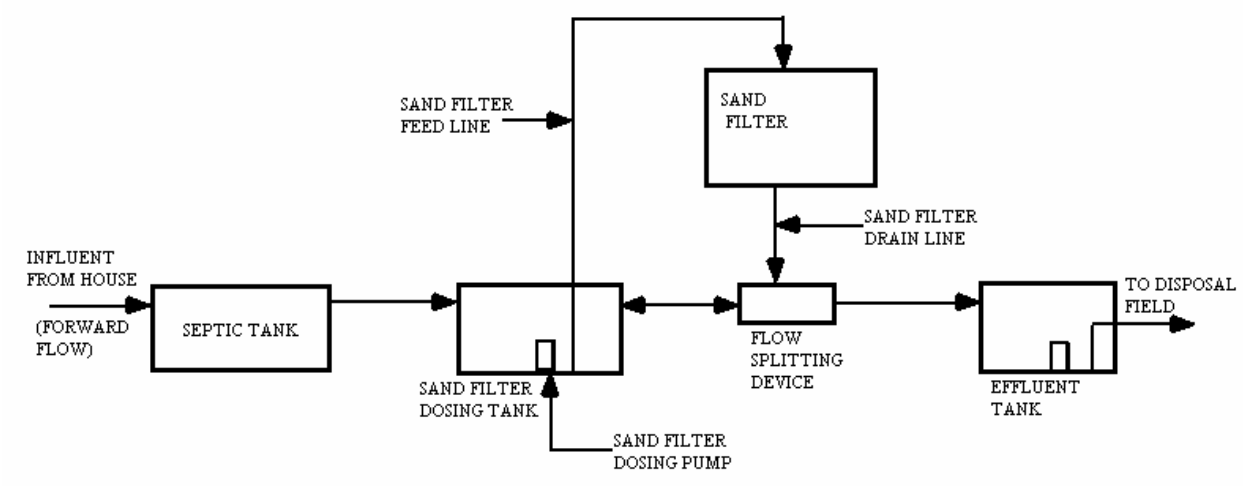

4.8. Aeration Systems

Most septic tanks provide anaerobic (no oxygen present) treatment of sewage. Aerobic (oxygen present) treatment is accomplished by injecting and circulating oxygen (via air) into the septic tank. A bacterial culture is formed, which settles into a non-aerated part of the septic tank. The bacterial culture is pumped back to the tank inlet to provide an active bacterial culture. This type of sewage treatment is known as the 'activated sludge' process.

Aerobic tanks have the potential to treat sewage far better than conventional septic tanks. This is due to the oxygen that is added to the liquid in the tank and the active bacterial culture. In some cases effluent can be discharged directly to surface water. In Michigan, an NPDES Permit is needed for a surface water discharge.

Aerobic tanks are, however, considerably more complicated to design, construct, and maintain than septic tanks. These systems typically need at least 400 gallons of sewage a day to function properly. By comparison, a normal residence discharges about 200 gallons of sewage a day.

Aerobic systems are often chosen in areas where the soil is not suitable for a conventional drain field. It is estimated that about two-thirds of all land in the United States is unfit for use as a drain field. Because of the higher quality of effluent from an aerobic system, it can extend the life of or reduce the size needed for a conventional drain field.

Aerobic systems require power to operate, and therefore they are more costly to operate than a conventional septic tank and drain field system. Because they have moving parts, they require more frequent maintenance. If problems arise with the supply of air to the bacteria, an aerobic tank loses all its effectiveness. An aerobic system is subject to 'upset' when sudden heavy sewage loadings are present, and they may also release greater concentrations of nitrates to the groundwater. The consequence of any process failure is a quick passage of poorly treated effluent, since there is typically no physical barrier to passage of water through the system. Once "off track", it often takes considerable time for an activated sludge process to recover. A schematic of an aeration system within a septic tank is shown in Figure 4-5.

Fig. 4-5 Aeration Augmentation to a Septic Tank

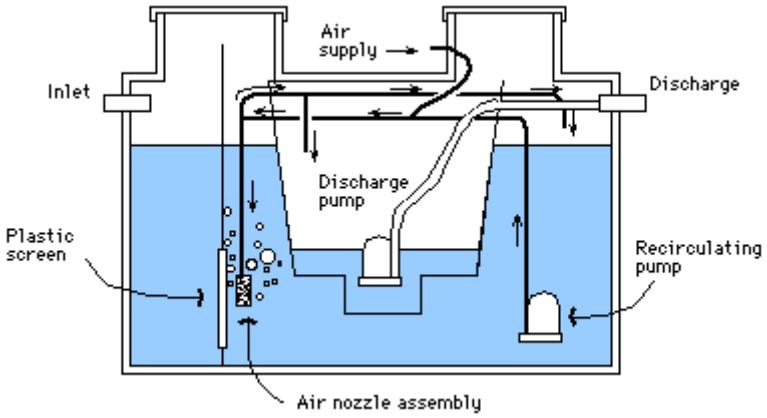

4.9. Constructed Wetlands

Constructed wetlands are often used to augment other OSDSs to 'polish' the effluent from the septic tank or drain field. Constructed wetlands treat sewage by bacterial decomposition, settling, and filtering. Oxygen for aerobic decomposition is supplied by the plants growing in the wetland. Solids are filtered and finally settle out of the sewage within the wetland. After about two weeks in the wetland, effluent is usually discharged by gravity to an unlined wetland bed or a conventional drain field.

Typically, a constructed wetland is a series of rectangular plots filled with soil or gravel and lined to prevent waste from leaching into groundwater. The plants grown in these plots not only offer a root mass for filtration but also provide oxygen for sewage treatment. The roots offer attachment sites for bacteria, which consume the available oxygen in the process of breaking down pollutants. The plants themselves also take up pollutants. Figure 4-6 shows a typical constructed wetland.

Constructed wetlands are engineered systems designed to simulate natural wetlands to exploit the water purification benefits of naturally occurring wetlands. Appropriate vegetation is planted in the constructed wetlands for the primary purpose of contaminant or pollutant removal from sewage.

Fig. 4-6 Typical Constructed Wetlands

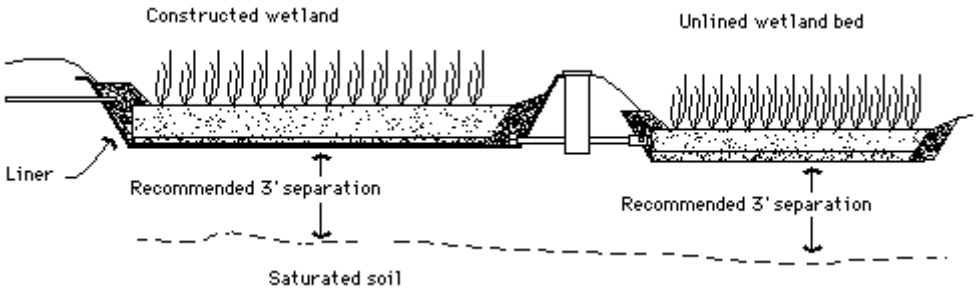

Among the most important removal processes are the purely physical processes of sedimentation via reduced velocities and filtration by vegetation. These processes

account for the strong removal rates for suspended solids, organic matter and sediment-attached nutrients and metals. In most cases, nitrogen and phosphorus reduction in the effluent is typically superior to a conventional septic system. Evapotranspiration is another potential benefit of constructed wetlands. Through this process, sewage is actually taken up by plant material and evaporated into the atmosphere, reducing the amount of effluent from such systems. Evapotranspiration is not nearly as effective in colder climates as it is in warm areas.

Plants in a constructed wetland must be harvested and disposed of periodically to completely remove the nutrients contained in them.

4.10. Drip Irrigation

Drip irrigation (Figure 4-7) has been tested and used extensively in the southern United States. It uses small diameter tubing and a series of emitters to apply sewage to the drain field. By applying small amounts of effluent over a large area, evaporation is maximized, as is the plants' ability to take up water and nutrients. Irrigation lines freezing in winter can be a problem, and because there are other moving parts, operation and maintenance can be an issue.

In more arid climates, this strategy can greatly decrease dependence upon potable water systems to serve irrigation demands. The use of these systems is also encouraged anywhere that beneficial reuse of treated sewage is good public policy.

Fig. 4-7 Drip Irrigation

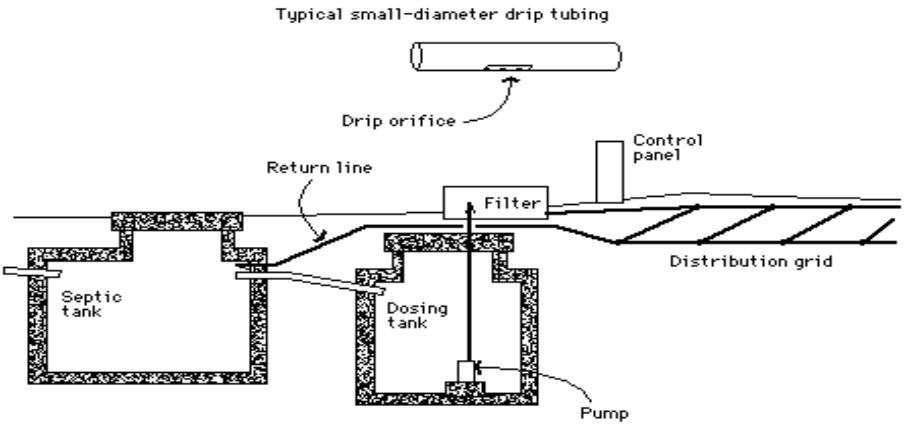

4.11. Spray Irrigation

Spray irrigation (see Figure 4-8) uses both biological and chemical processes to treat sewage. The pretreated and often disinfected sewage is applied at low rates to agricultural or wooded areas.

A spray irrigation system often consists of a septic tank, a sand filter, and a disinfection unit within a spray application site. The final highly pretreated effluent is applied to the spray field through a conventional sprinkler system.

Site suitability is determined by soil permeability, the depth to saturated soil or bedrock, the availability of a buffer zone, and land slope. For proper treatment of sewage, the soil must remain unsaturated, just as it does in subsurface systems.

Compared to other sewage treatment alternatives, spray irrigation systems require more land. That's why they may be best suited for recreational areas (such as golf courses), and agricultural land. Irrigation lines freezing in winter can be a problem, and because there are other moving parts, operation and maintenance can be an issue.

Fig. 4-8 Spray Irrigation

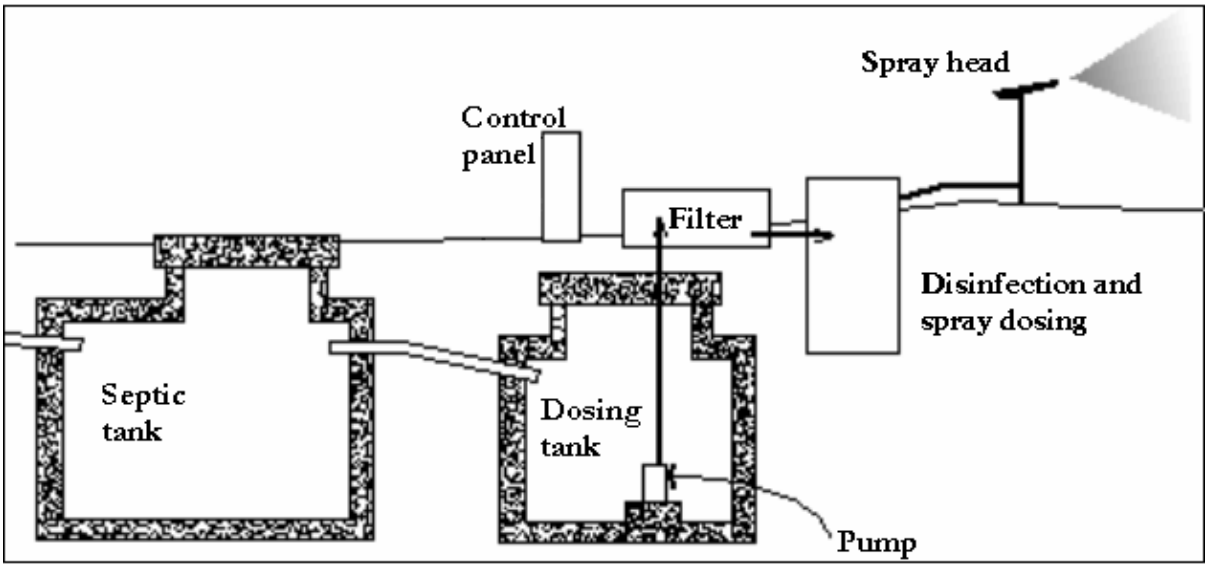

5. System Costs

Estimates should be made of a system's capital costs and its operational costs over its expected lifetime. Capital costs include land, equipment (tanks, pumps, rock, etc.) and construction. Operational costs include electricity, pump replacement, repairs, and such routine maintenance as regular inspections, the periodic cleaning of septic tanks or the replacement of sand in sand filters.

It is difficult to know whether any one sewage treatment system is better than another. That's because any comparison depends on numerous factors, including:

- The volume of flow
- Whether research will confirm that less soil treatment area is needed for effluent that is largely pretreated
- The specific site conditions
- A site's slope
- The location of individual lots

According to studies conducted in Minnesota, it currently appears that the least costly treatment system is a conventional residential septic system at daily sewage flows of 5,000 gpd and less. This translates roughly to a 25-home service area.

For flows between 5,000 and 15,000 gpd, (25 to 75 homes) the least costly system is a series of individual septic tanks (one for each residence) connected to a communal drain field or mound system. Sand filters, aerobics tanks and package plants (see discussion under section titled *"Small-Community Sewage Treatment Systems*") become more advantageous, especially if a 50 percent reduction in the size of the soil treatment area is allowed.

If there is plenty of low-cost land available, spray irrigation becomes a viable, cost-effective system, even in northern climates.

For flows over 15,000 gpd (over 75 homes) municipal sewage treatment systems such as waste stabilization ponds and mechanical sewage treatment plants start becoming cost-effective depending on the individual situation.

Nonetheless, this comparison is based upon ***cost*** as the driving factor, and not ***effluent quality***.

6. Small-Community Sewage Collection Systems

This section will deal with sewage collection systems available to small communities that choose to treat their sewage centrally rather than at each individual home site using one of the OSDSs described in the previous sections. Typical sewage collection systems include:

- Gravity sewers
- Small-diameter gravity sewers
- Low-pressure force mains coupled with grinder pumps
- Low-pressure force mains pumping effluent from septic tanks (STEP Systems)
- Vacuum sewers
- Combinations of the above

Each of the above systems is briefly described in the following section.

6.1. Gravity Sewers

Gravity sanitary sewers transport sewage by gravity flow to treatment facilities. They flow from high to low points, and are constructed at sufficient depth to prevent freezing and to receive sewage flows from basements. Systems are designed with a minimum slope to maintain a self-cleaning velocity of two feet per second by the slope of the pipe. Due to the depth and slopes required, gravity sewers often require lift station pumps to transport sewage from low to high points, and then flow is again allowed to proceed by gravity. In flat areas or areas where sewer grade is opposite of ground grade, additional lift stations may be required to transport the sewage. In a system design, lift stations, force main, and sewer construction activities are selected to optimize capital versus operation and maintenance costs.

A gravity sewer system has some advantages. While a gravity system requires regular maintenance, it generally requires less maintenance than a low-pressure force main system. A gravity system can also handle large variations in flow, which would be helpful if residents have roof drains inadvertently connected into the sanitary sewer. Finally, gravity sewers are more readily adaptive for growth and change within the sewer district. This is important in communities that grow or will redevelop.

A disadvantage associated with gravity sewer system is the cost of construction. Construction below the water table and deep construction can significantly increase capital costs. A high water table in the area may result in higher dewatering costs, and flat grades normally found around lakes results in the need for several lift stations in order to transport sewage.

6.2. Low-Pressure Force Mains Coupled With Grinder Pumps

A low-pressure force main system is a collection system that uses pumps and force mains. Each home is provided with a grinder pumping unit. The pump grinds the sewage, and then transports it to a common force main. A low-pressure system may need a large central pumping station due to the limited pressure grinder pumps can produce. Grinder pumps require power from each individual home and a control panel mounted on the outside of the house. A grinder pumping unit consists of a sump, pump and controls. Only the cap of the unit is exposed on the ground surface.

An advantage of a low-pressure sewage collection system is the cost of construction. Because the force main is small in diameter, it often can be installed using a method called directional drilling. Differing from an open cut method, directional drilling bores under the ground surface. This method reduces the restoration costs associated with the open cut method and helps to preserve landscaping and road pavement.

An additional advantage is that a force main may not have to be buried as deep as a gravity sewer system, thus reducing depth requirements and construction costs.

A disadvantage of a low-pressure system is the cost of maintenance. Based on data from installed systems, the average grinder pump operation and maintenance cost is approximately $10 per year per pump at startup. Operation and maintenance costs will increase over the life of the unit. This cost does not take into account the operation and maintenance of the force main, lift stations, and sewage treatment plant.

An additional disadvantage is the limited expansion capacity of the system. If expansion of the system is desired, the estimated flows from the expanded area must be included in the original design calculations for the low-pressure force main.

6.3. STEP Systems

A Septic Tank Effluent Pump (STEP) sanitary sewer collection system is a combination of a septic tank and low-pressure force main. The system uses a septic tank to collect solids from the sewage, and an effluent pump to transport the remaining liquid wastes to the sewer system. Septic tanks are part of existing OSDSs. The STEP system eliminates the need for a drain field.

An advantage of this system is the lower costs involved in building a STEP system.

A disadvantage to the STEP system is that it only addresses the liquid portion of sewage disposal. The system still requires septic tank maintenance. Pumping out the septic tank every three to five years is critical to prevent sewer system failure. This collection system would improve on the existing system but not completely remove the existing system, thus leaving some septage disposal issues.

6.4. Vacuum Sewers

Differential air pressure is the driving force in vacuum sewer systems. The pressure differential between the atmospheric pressure and the vacuum in the sewer lines of 7 to 10 psi provides the energy required to open the vacuum interface valves and to transport the sewage to the vacuum station.

Sewage flows by gravity from homes into a collection sump. When 10 approximately gallons accumulates in the sump, the vacuum interface valve located above the sump automatically opens and differential air pressure propels the sewage through the valve and into the vacuum main. Sewage flows through the vacuum lines and into the collection tank at the vacuum station. Sewage pumps transfer the sewage from the collection tank to the sewage treatment facility or nearby gravity manhole.

The vacuum station is similar in function to a lift station in a gravity sewer system. Sewage pumps transfer the sewage from the collection tank through a force main to the treatment plant. Unlike a lift station, a vacuum station has two vacuum pumps that create vacuum in the sewer lines and an enclosed collection tank.

Typical packaged vacuum stations consist of two vacuum pumps, two sewage pumps, a collection tank and controls.

7. Small-Community Sewage Treatment Systems

The following section describes several of the more conventional community sewage treatment systems, which typically produce better effluent quality than the basic septic system or modifications to it. Community systems, regardless of their type, also have a few major advantages over conventional, individual OSDSs:

- Construction plans generally receive some level of regulatory review for both design and construction.
- Community sewage treatment systems are often regulated by the State and monitored often for effluent quality, depending upon the amount of discharge from them.
- Community sewage treatment systems are operated by qualified, licensed professional personnel as opposed to homeowners, and the costs for doing so are collected from individual homeowners. Operators monitor effluent quality and file regular reports. Some systems can be remotely monitored.
- Community sewage treatment systems require financial back-up from a local unit of government.

Ironically, bulleted items #1 and #3 above are often reasons why developers choose to develop properties utilizing individual septic systems. In the case of #1, it may be to cut down on the time and expense associated with state reviews and requirements. In the case of #3, it may be because the local government is not interested in assuming control of a private system.

Typical sewage treatment options include:

- Community OSDSs and variations on basic septic systems as previously described.
- Lagoons
- Mechanical plants
- Package plants

Each of these systems is discussed in the following section.

7.1. Community Septic Systems

Septic systems and their many variations were basically described in a previous section. The only real difference when they serve a community is that they are larger than residential systems and they are usually professionally managed and regulated.

7.2. Lagoons

Two common types of lagoon treatment plants are stabilization lagoons and aerated lagoons. Both rely on the availability of large tracts of land upon which the treatment plant would be constructed. The main benefit of this type of plant is the minimal equipment and maintenance activities required to sustain the facility.

Lagoons are constructed by the excavation or enclosing of an area by dikes. A double-composite liner system comprised of clay and a plastic membrane is installed to hold the sewage. Natural bacterial decay of sewage occurs during the period the sewage is held in the lagoon.

The size of sewage lagoons is dictated by the quantity of sewage requiring storage and the ability of oxygen to be transferred into the sewage for treatment.

Stabilization lagoons are sized to limit the system loading such that natural oxygen transfer is sufficient to meet treatment needs. As a result, the depth of the lagoons is limited therefore requiring large surface areas.

Aerated lagoons reduce the surface area of the storage lagoons by mechanically providing oxygen to the system. This is typically accomplished by creating an additional aerated lagoon, which holds the sewage for approximately one week. During its time in the aerated lagoon, oxygen is mechanically introduced into the sewage and the waste is treated. Following initial treatment the flow is delivered to the storage lagoons. As a result of the initial treatment and reduction in oxygen demand, the subsequent lagoons may be significantly deeper, thus reducing the acreage required for the treatment facility.

The lagoon surface area will depend on the holding periods required by state regulations and the treatment design. Final effluent disposal would be by irrigation or infiltration.

7.3. Mechanical plants

A mechanical plant is a facility that uses machinery to assist in the treatment of sewage in order to meet treated sewage discharge quality criteria. A significant difference with mechanical plants is the separation and handling of solids. Thus in addition to treating and disposing of a liquid stream, a solids waste stream is generated and requires disposal.

Sewage treatment plants using extended aeration or sequencing batch reactors (SBRs) appear to be a very viable option for many small communities. Depending on the discharge location from the plant, a disinfection step may be required.

Typical components of the liquid portion of the extended aeration sewage stream consist of the following components:

- Screening
- Grit Removal and Clarification
- Extended Aeration Reactors
- Return Activated Sludge Pumping

Benefits associated with extended aeration include:

- No primary clarification and associated odor control
- Improved solids reduction
- Minimized chemical usage, and
- Greater flexibility in handling system peaks and fluctuations
- The extended aeration process does require clarifiers to separate solids from the waste stream, and flow equalization is not required.

The liquid portion of the SBR sewage treatment plant would likely consist of the following components:

- Screening
- Grit Removal and Clarification
- Sequencing Batch Reactors

The SBR would function in a manner biologically similar to the extended aeration process. Benefits associated with SBRs include:

- No primary clarification and associated odor control
- Improved solids reduction
- Minimized chemical usage, and
- Greater flexibility in handling loading fluctuations

SBRs serve as biological reactors and clarifiers all in one unit. Therefore, no final clarifier is required. However, if disinfection were needed, flow equalization would be required to minimize the size of the disinfection equipment.

The solids handling portion of both sewage treatment plant processes would be similar. Final disposal would usually be by land application in accordance with regulatory requirements.

The major benefit of a mechanical plant compared to a lagoon system is the decrease in land area required for locating the facility. The reduction in land area is typically the result of this type of plant consolidating treatment units and then directly discharging to a surface water body. If treated sewage storage is required, significant land area reductions may still be realized as the State permits the storage ponds to increase in depth, thus reducing land

area required. Disadvantages of a mechanical plant relative to a lagoon system are the need for a full-time, certified system operator and increased operational costs.

8. Treated Sewage Discharges

Discharges from community sewage treatment plants are another issue to be considered. There are three basic methods of disposing of treated sewage:

- Surface water discharge
- Groundwater infiltration
- Irrigation

Each of these methods is discussed in the following section.

8.1. Surface Water Discharge

The Michigan Department of Environmental Quality (MDEQ) controls surface water discharge into a State water body through the National Pollutant Discharge Elimination System permit program. The program is designed to minimize the impacts of sewage discharge to surface waters. Typically, a sewage discharge permit may be obtained to discharge to large or flowing bodies of water.

A fundamental premise of the feasibility for this type of permit is the close proximity of a large or flowing water body. In areas where neither is present, this option is not practical. An advantage of discharging to a surface water body is that it is typically permitted for discharge throughout the year. A sewage treatment plant with this permit does not require storage facilities to retain treated sewage until discharge periods. Elimination of lagoon storage ponds also minimizes land area required and capital costs associated with construction of storage ponds.

8.2. Groundwater Infiltration

Groundwater infiltration or percolation means allowing treated sewage to drain or infiltrate into groundwater. An infiltration area, like a "pond," is created and filled with treated water. This "pond" then acts as a groundwater recharge source.

Infiltration beds require soils with high porosity to allow continuous migration of water into the subsurface. Minimum normal groundwater depth and prevention of soils from flooding are additional constraints placed on the disposal system. Thus, lighter, sandier soils with a deep water table are beneficial to this disposal method.

Groundwater infiltration is strictly governed and monitored by the State of Michigan. Discharge criteria are set to protect the groundwater, maintaining its drinking water quality. A hydrogeological study would need to be performed on a site to determine its suitability for sewage infiltration. Should the site be suitable, continued monitoring of sewage discharges and groundwater would be required under a State of Michigan permit to discharge to the groundwater. Monitor wells would need to be installed to allow sampling of the groundwater. Infiltration beds also have the added advantage of being able to be operated throughout the year, thus minimizing the need for large storage ponds.

8.3. Irrigation

Irrigation over farm fields is an effective way to dispose of sewage. However, farm irrigation is a seasonal activity and thus discharge from the treatment plant is limited to the summer months. As a result, sewage flows generated during the non-irrigation months must be stored in lagoons until irrigation is possible.

The irrigation fields would be sized to accept the equivalent of one year's flow in four months, while the lagoons would be sized to hold sewage eight months of the year. The irrigation site design would be for 2 inches of sewage application per week for four months.

One consideration for the farm fields is that the site must have enough percolation or seepage capacity to accept the irrigated sewage. Thus, lighter, sandier soils are normally

chosen for irrigation systems. Additionally, irrigation may only be conducted on fields producing crops that are not used for human consumption.

Similar to the infiltration bed option, a hydrogeological study would need to be performed on the site to determine its suitability for sewage irrigation. Irrigation is strictly governed and monitored by the State of Michigan. Discharge criteria are set to protect the groundwater, maintaining its drinking water quality. Monitoring of sewage discharges and groundwater would be required under a State of Michigan permit to discharge to the groundwater.

9. Overview of Commonly Recommended Management Practices for Septic Systems

9.1. Chemical Additive Restrictions

Organic solvents and alleged 'performance-enhancing' additives are often used as septic system cleaners and sometimes as substitutes for sludge pumping. There is little evidence that such cleaners perform any of their advertised functions, and can instead exterminate useful microbes, resulting in increased discharge of pollutants. In addition, the chemicals themselves, halogenated and aromatic hydrocarbons, can easily contaminate receiving waters. Restrictions on the use of these additives can preclude further exacerbation of poor system function. Additive restrictions are most effective when used as part of a Best Management Practices (BMP) system which involves other source reduction practices such as phosphate bans and use of low-volume plumbing fixtures, as well as mitigative BMPs such as upgrading and maintenance.

9.2. Education

Many of the problems associated with improper use of OSDSs may be attributed to lack of user knowledge on operation and maintenance. Educational materials for homeowners and training courses for installers and inspectors can reduce the incidence of pollution from these widespread and commonly used pollution control devices.

9.3. Elimination of Garbage Disposals

Eliminating the use of garbage disposals can significantly reduce the loading of suspended solids, nutrients, and organic material to septic systems, as well as decreasing the buildup of solids in septic tanks, thus reducing pumping frequency.

9.4. Inspection and Maintenance

The high degree of system failure necessitates regular inspections. Homeowners can be provided with educational materials and can serve as monitors of their own systems. At a minimum, requirements should be established for inspection during change of property ownership.

9.5. Pumping

Septic tanks require pumping to remove accumulating sludge approximately every 3 to 5 years. The frequency can vary depending on tank size, family size, and garbage disposal use. Failure to remove sludge periodically will result in reduced tank settling capacity and eventual overloading of the soil absorption system, which is more expensive to remedy.

9.6. Phosphate Detergent Restrictions

Conventional septic systems are usually very effective at removing phosphorus. However, certain soil conditions combined with close proximity to sensitive surface waters can result in phosphorus pollutant loading. If such conditions are sufficiently prevalent within areas of concern, restrictions or bans on the use of detergents containing phosphate can be implemented. Eliminating phosphates from detergent can reduce phosphorus loads to septic systems by 40 to 50 percent.

10. Overview of Measures that Minimize a Septic System's Impact on the Environment

10.1. Denitrification Systems

Even properly functioning conventional systems are not effective at removing nitrogen. In areas where nitrogen is a problem pollutant, existing conventional systems can be

retrofitted to provide for nitrogen removal through effective linking of aerobic and anaerobic transformation processes. Systems such as sand filters and constructed wetlands have been shown to remove over 50 percent of the total nitrogen from septic tank effluent. Denitrification systems are most effective when used as part of a system that involves source reduction through elimination of garbage disposals and use of low-volume plumbing fixtures.

10.2. Upgrade or Replacement of Failing Systems

Replacement of old, inadequate systems and repair of failing ones is an integral part of an OSDS management program. Common repairs include refitting the OSDS with new inflows and outlets, creating an alternative drain field, or the use of other alternative technologies. Replacement of the entire system may be required where the original one was inadequate, improperly constructed or installed, or where the system does not respond to corrective measures. Proper inspection cycles are an important facet of this process.

10.3. Septage Management

What are the options for septage management? The basic methods of treating and disposing of septage are by:

- Land application,
- Treatment at municipal sewage treatment plants, and
- Treatment at independent septage treatment plants.

Listed below are some of the various options for each of these three approaches:

10.3.1. **Land Application**

- Surface application
- Subsurface injection
- Landfilling

10.3.2. **Treatment at Sewage Treatment Plants**

- Addition to upstream sewer manhole

- Addition to plant headworks
- Addition to sludge handling process
- Addition to both liquid stream and sludge handling processes

10.3.3. **Treatment at Independent Septage Treatment Plants**

- Stabilization lagoon
- Chlorine oxidation
- Aerobic digestion
- Anaerobic digestion
- Biological and chemical treatment
- Conditioning and stabilization
- Composting

10.4. Septage Management Discussion

What are the options for septage management? Selecting the appropriate septage management option depends not only on technical issues, but particularly on regulatory requirements. Every management option chosen should be in accordance with local, state, and federal regulations. Some of the factors that influence the process of selection include:

- Land availability and site conditions,
- Buffer zone requirements,
- Hauling distance,
- Fuel costs,
- Labor costs,
- Costs of disposal, and
- Other legal and regulatory requirements.

In Kent County, land application in winter is an issue due to the inability of frozen ground to assimilate septage. Other limitations to certain management options of untreated septage are the lack of available sites or potential odor and pathogen problems, which can be reduced by pretreating and stabilizing the septage before it is applied to the land.

Stabilization is a treatment method that decreases odors, the levels of disease-causing organisms, and further decay of septage. Pretreatment/stabilization is achieved by physical, chemical, or biological processes. Stabilization options include lime stabilization, aerobic digestion, anaerobic digestion, and composting.

Land application of septage is currently the most commonly used disposal method in the U.S. It is relatively simple and cost-effective, uses minimal energy, and recycles organic material and nutrients to the land. With proper management, domestic septage is a resource that contains nutrients that can condition the soil and decrease the reliance on chemical fertilizers for agriculture. Proper septage management maximizes these benefits of septage while protecting public health and the environment. Septage can be incorporated into the land on either the surface or subsurface. Surface application includes spreading septage from septage hauler trucks, specially designed land application vehicles, or tank wagons onto sites, or using spray irrigation, ridge and furrow irrigation, and overland flow. Unfortunately, current conditions in Michigan suggest that the overland flow option for septage is not desirable because septage is often not land-applied properly, and there is inadequate regulatory enforcement or oversight to assure proper land application.

For reasons outlined in the above paragraph, the State of Maryland outlawed land application of septage in the early 1990s. Likewise, Muskegon County has prohibited the land application of septage for over 20 years. Additionally, according to MDEQ sources, Kalamazoo and Jackson Counties in Michigan have recently banned the practice, and other areas are considering it. MDEQ estimates that as much as 60,000,000 gallons of septage is land-applied in Michigan each year.

Subsurface incorporation places untreated septage just below the soil surface, reducing odors and health risks while fertilizing and conditioning the soil. Options for subsurface application include plow furrow cover (where liquid septage is discharged from a tank into a narrow furrow and is then covered by a second plow) and subsurface injection (where liquid septage is injected in a narrow cavity created by a tillage tool).

In addition, various burial options exist, including placing septage in trenches, holding lagoons, and sanitary landfills.

A convenient and preferred option for septage treatment would be at a sewage treatment plant. The constituents of septage are similar to domestic sewage, even though septage is much stronger and more concentrated.

The main approaches to treating septage at a sewage treatment plant are described below:

- *Septage Addition to Upstream Sewer Manhole*—Septage is added to a sewer upstream of the sewage treatment plant, and substantial dilution of septage occurs prior to it reaching the sewage treatment plant.
- *Septage Addition to Plant Headworks*—Septage is added to sewage immediately upstream of the screening and grit removal processes.
- *Septage Addition to Sludge Handling Process*—Septage is handled as sludge and processed with sewage treatment plant sludge after pretreatment in the receiving station.
- *Septage Addition to Both Liquid Stream and Sludge Handling Processes*—Septage is pretreated to separate liquid and solid fractions, which are then processed accordingly.

However, when sewage treatment facilities are too distant or do not have adequate capacity, independent septage treatment plants can be of use.

Independent septage treatment plants are designed exclusively for treating septage and usually have many unit processes to handle both the liquid and solid portions of septage. These facilities vary from stabilization lagoons to sophisticated treatment plants. Independent septage treatment plants use such processes as chlorine oxidation, aerobic digestion, anaerobic digestion, and biological and chemical treatment.

Many septage treatment plants use lime to provide both conditioning and stabilization before the septage is dewatered. The liquid residual can be discharged to a publicly owned

treatment works or it can undergo further treatment and then be discharged. Septage solids can be sent to a landfill, composted, applied to the land, or incinerated.

Another feasible option for septage treatment facilities is composting in locations where bulking agents are available and the humus product is needed as a soil conditioner. It is preferable to dewater septage before composting. Septage is resistant to dewatering, thus the need for conditioning chemicals is considerable and varies among different loads.

Cost considerations cannot be generalized because of the wide range of options available for septage management. The cost of a septage management system depends on the treatment and disposal method used and the regulatory requirements of a particular area. Administrators of a septage management program should be aware of disposal options and the cost involved.

10.4.1. **Kent County Septage Recap**

The disposal of septage is an issue of real concern in Kent County. While land application is allowed, it is often done in an irresponsible manner. And, in spite of state laws governing land application of septage, there is insufficient time for regulators to adequately police this practice. Abuses have been documented, and a local television station even ran an investigative report on the practice several years ago.

Consider the following scenario if Kent County elected to ban the land application of septage:

10.4.1.1. Assumptions

- Develop an estimate of the daily demand for septage treatment, assuming average times between tank pumpings of three and five years.
- Assume there are 45,000 residential septic systems in operation in Kent County.
- Assume each septic tank holds 1,250 gallons on average.

10.4.1.2. Current Information

- There are currently two known septage treatment facilities in Kent county:
  - City of Wyoming: Capacity 15,000 gpd
  - Plummer's Septic: Capacity 40,000 gpd
- Kent County issued 14,511 septic system permits (new and repairs) between 1994 and 2001.
- The 1990 U.S. census listed 34,692 septic systems in operation in Kent County.

10.4.1.3. Evaluation

Using a conservative total of 45,000 septic systems with an average of 1,250 gallons of septage held in septic tanks, this equates to 56,250,000 gallons of septage. The following table shows the septage pumping rates and needed treatment based upon three- and five-year pumping cycles, based upon 200 working days each year:

Table 10-1 Kent County Septage Pumping Estimates

Total Gallons to Pump	Daily Pumpage, 3-Year Cycle	Current Daily Capacity	Capacity Needed
56,250,000	93,750 gpd	55,000 gpd	38,750 gpd
	Daily Pumpage, 5-Year Cycle	**Current Daily Capacity**	**Capacity Needed**
56,250,000	56,250 gpd	55,000 gpd	1,250 gpd

10.4.1.4. Residuals

Each residence produces about 100 pounds of biosolids per year in a septic tank. This results in about 2,250 tons of septage biosolids on a yearly basis regardless of the pumping cycle.

10.4.1.5. Regional Perspective

This same type of evaluation can be carried out regionally or on a statewide basis.

11. Existing OSDS Management Practices and Controls, Ordinances and Public Health Codes in Other Communities

Where development using septic systems has already occurred, state and local governments have a relatively limited ability to reduce pollutant loadings from them. However, a number of useful steps can be taken. An OSDS management program can reduce water quality degradation and save local governments and homeowners' time and money. A variety of agencies can take on management of existing OSDSs; sewage management utilities or districts are the leading decentralized agencies.

Examples of measures that have been taken or initiated by other public entities to better manage OSDSs are given in the following recaps:

11.1. Wayne County, Michigan

Wayne County enacted an ordinance to regulate water wells and septic systems and created a program to regularly evaluate OSDSs and require their periodic maintenance. Key elements of Wayne County's ordinance:

- Findings of environmental harm from septic systems are described.
- The ordinance covers all land parcels using septic systems.
- System evaluations are required before any property transfer.
- The County Health Department has compliance responsibility and authorization to enter properties and inspect septic systems.
- Landowners have the right to contest Health Department findings.
- Criminal enforcement carries a fine of up to 90 days in jail and a fine of $200.
- Civil enforcement includes fines ranging from $200 to $1,000 depending on the number of violations.
- Lists the responsibilities for owners, registered evaluators, septage service providers, municipalities, realtors, and the County Environmental Health Department.

- The full ordinance is online at:
  http://www.waynecounty.com/hcs/phealth/environ/well_ordinance.htm

11.2. Washtenaw County, Michigan

Washtenaw County enacted an ordinance to regulate and inspect residential OSDSs at the time of property transfer. Key elements of Washtenaw County's ordinance:

- The ordinance requires an evaluation of OSDS at the time of property transfer.
- Similar to Wayne County's, but doesn't include detailed information on the ordinance's purpose, or responsibilities of those involved-mainly the property owner or the Health Department.
- Outlines corrective actions, time limits, enforcement and compliance.
- The County Health Department has compliance responsibility and authorization to enter properties and inspect septic systems.
- Landowners have the right to contest Health Department findings.
- Criminal enforcement carries a fine of up to 90 days in jail and a fine of $200.
- Civil enforcement includes fines ranging from $200 to $1,000 depending on the number of violations.
- A Q&A fact sheet about the ordinance is online at:
  http://www.co.washtenaw.mi.us/depts/eis/wells.html

11.3. Scott County, Minnesota

Scott County enacted an ordinance to regulate individual sewage treatment systems. Key elements of Scott County's ordinance:

- Third drain field locations are recommended.
- New and existing treatment systems have inspection and pumping schedules.
- Additives are forbidden.
- All owners/users are notified by mail every two years that it is time to inspect/pump.
- More information is online at:
  http://www.co.scott.mn.us/eh/ists/ehists4.htm

11.4. Austin, Texas

Austin enacted an ordinance to regulate individual sewage treatment systems. Like Kent County, the area is experiencing intense growth outside its 'urban' boundary. Protecting their Edwards Aquifer is an important motivation for Austin. Key elements of Austin's ordinance:

- Recommends cluster systems.
- Encourages subdivision planning, and includes information on alternative or additive OSDSs.
- Has a maintenance and management section for individual and cluster systems.
- Considering management and inspection requirements, technical standards, certification standards for O&M companies, rate structures, enforcement procedures, and public information and education needs.
- More information is online at:
  http://www.ci.austin.tx.us/news/ossf_default.htm

11.5. Shiawassee County, Michigan

Shiawassee County enacted an ordinance to regulate individual sewage treatment systems. Like Kent County, the area is experiencing intense growth as it is in close proximity to Flint, Detroit and Ann Arbor.

- The County Health Department and Health officer enforce and run the program. Shiawassee County documented pollution to a surface water body and potential contamination of groundwater due to the use of septic systems, and decided to enact an ordinance to deal with the issue. Key elements of Shiawassee County's ordinance:
- Current *functioning* systems do not have to comply with the new standards.
- The rules adopted supplement existing State laws.
- System failure is defined.
- Inspections and remedies are triggered upon any property transfer.
- Independent inspectors are allowed, but must be certified by the Health Department.
- Monetary and civil penalties are described in the ordinance for non-compliance.

11.6. Benzie County, Michigan

Benzie County enacted an ordinance to regulate individual sewage treatment systems at the time of transfer or sale of such properties. Key elements of Benzie County's ordinance:

- Property with a septic system must be inspected before it is sold or transferred.
- Properties affected must bring systems up to meet current codes.
- Owners of pre-1971 systems must notify the Health Department of the existence of their pre-1971 system, along with pertinent information relative to its age, type and proximity to surface water or well water supplies.
- After this filing, the Health Department may inspect the system.
- The property owner gains the right to use his system for ten years following compliance with the above, except for a property transfer.

11.7. Milford Charter Township, Michigan

Milford Charter Township enacted an ordinance to regulate community OSDSs. While the Township recognizes that a community sewer system may better serve the interests of the health, safety and welfare of its citizens, State law mandates a back-up guarantor of such a system. This ordinance is designed to protect the Township from any financial hardship in the event it must 'take over' operation of a failing or insolvent community system.

Key elements of Milford Charter Township's ordinance:

- Certification from the designer as to the system's applicability and fitness.
- An executed agreement between the owner and a licensed operator of the system, subject to township approval and prior approval of the Township before any termination of the O&M contract.
- Indemnification of the Township from any costs or liability associated with operating or managing the system.
- Establishment of an escrow account with sufficient funds to properly operate, repair or replace the system should such be necessary.
- Payment of an application fee for the purpose of reviewing all designs, contracts and agreements.

- The owner of the system shall place in force an insurance policy to protect the insurable components of the system.
- The Township will have deeded access to the treatment site at all times and for any reason.

11.8. Allegan County, Michigan: Allegan County Water and Sewage Regulations

- Regulates the construction and placement of septic systems, including criteria for soils and isolation distances, etc.
- Sets up institutional structure for overseeing this process, such as permit requirements, fees, and penalties.
- Septic systems must be inspected after they are installed, and inspectors are allowed to examine well and septic systems, but there are no maintenance inspections.
- Homeowners are required to maintain their septic systems, but there are no specific requirements or enforcement.

11.9. Bay County, Michigan: Sanitary Code

- Describes requirements for connections to public sewer in detail.
- Talks about construction and placement regulations like Allegan County's Ordinance does, but in greater detail.
- Septic systems must be inspected after they are installed, and inspectors are allowed to examine well and septic systems, but there are no maintenance inspections.

11.10. Grand Traverse County, Michigan: Environmental Health Regulations

- Requires hookup to public sewer systems when available and forbids discharge of untreated sewage.
- Describes general construction requirements and the permit procedure, including a health department inspection before the system is buried.
- Any system that violates this regulation or renders the property unfit for human habitation must be brought up to code.

- If the owners violate the regulation they may be guilty of a civil infraction and fined up to $1,000.00/day.
- Health officers may inspect premises but they are not required to except at the time of construction.

11.11. Jackson County, Michigan: Sanitary Code

- Includes permit requirements for septic systems, requires hookup to public sewer when available and describes construction guidelines.
- Inspection is required at the time of construction and is optional afterward.
- Fines for violations are $1000.00/day/violation.
- Septage waste may be land applied on approved sites.
- The Health Officer shall inspect land application sites and hauling vehicles.
- Haulers are required to maintain thorough records and make them available to the Health Department.
- Water supply and solid waste regulations are also included.

11.12. Kalamazoo County, Michigan: Sanitary Code

- Includes permit requirements for septic systems, requires hookup to public sewer when available and describes construction guidelines.
- Requires county licensing for sewage disposal system installers and septage waste haulers.
- The Health Officer may inspect premises and order an abatement of a public health nuisance.

11.13. Kent County, Michigan: Sewage Disposal Regulations

- Includes permit requirements for septic systems, requires hookup to public sewer when available and describes construction guidelines.
- The Health Officer must review sewage disposal system plans, do a final construction inspection and may inspect premises afterward.

- Alternative systems may be approved if they do not create a nuisance to public health or the environment.
- The Health Officer may approve experimental systems on a limited basis.
- Establishes the Sewage Regulations Technical Advisory Committee in order to advise the Health Officer.
- Anyone violating these regulations is guilty of a misdemeanor and may be fined up to $200.00/day. Civil penalties may also be levied.

11.14. Macomb County, Michigan:

- This ordinance requires an evaluation of OSDSs before the sale or transfer of property.
- Very similar to Washtenaw and Shiawassee County's.
- Addresses corrective action and time limits as well as enforcement and compliance.

11.15. Massachusetts: Standard Requirements for the Siting, Construction, Inspection, Upgrade, and Expansion of OSDSs and for the Transport and Disposal of Septage.

- Forbids septic system additives.
- Sets up permit system and describes construction criteria.
- Establishes a process for review of alternative systems, allows them to be used in remedial situations if some conditions are satisfied, and sets up a piloting program.
- Lists requirements for alternative sand filter.
- Systems are inspected at the time of property transfer.
- Systems with a design flow of 10,000 gallons per day or more are inspected on a five-year schedule, and shared systems are inspected annually.
- Describes inspection criteria.
- Septage must be disposed of in the sanitary sewer or in a treatment plant.

11.16. Clinton, Montcalm, and Gratiot Counties, Michigan: Environmental Health Regulations Governing Water Supply, Sewage Disposal, Refuse Disposal, and Housing

- The Health Officer must approve septic system plans for poor sites and must inspect systems before their construction is complete.
- Includes permit requirements for septic systems, requires hookup to public sewer when available and describes construction guidelines.
- Willfully violating this ordinance is a $200.00 misdemeanor.

11.17. Muskegon County, Michigan: Sanitary Regulations

- The Health Officer may inspect premises.
- Includes permit requirements for septic systems, requires hookup to public sewer when available and describes construction guidelines.
- Violating this ordinance is a $100.00/day misdemeanor.
- Land application of septage is prohibited.

11.18. Ottawa County, Michigan: Environmental Health Regulations

- The Health Officer may inspect premises and enforce regulations.
- Requires connection to available public sewer systems.
- Forbids non-complying systems.
- Requires approval or an upgrade if dwellings are expanded.
- Allows the Health Officer to require a system to be abandoned, etc.
- Alternative systems are allowed upon approval of the Health Officer.
- Details the permit process.
- Describes construction requirements.

11.19. Washington: Chapter 246-272 WAC OSDS

- Sets standards and procedures for approving alternative systems.
- Requires connection to available public sewer.

- Describes construction criteria and permitting process.
- Owners must inspect their systems themselves every three years, pump when necessary and generally maintain it.
- Requires health departments to develop periodic monitoring programs for systems in general and systems in problem areas in particular.
- Restaurants with septic systems must be inspected annually.
- Septic system owners are responsible for repairing failed systems or obtaining a discharge permit where this is not possible.
- Lists areas of special concern and requires that septic systems in these be inspected at least once every three years.
- Establishes advisory committees.

11.20. Washington: List of Approved Systems and Products

- Describes various alternative treatment systems.
- Lists approved treatment systems by brand and states the effluent quality of each.
- Applies treatment standards to these systems.
- Lists approved septic tanks.

11.21. Wisconsin: Private Onsite Sewage Treatment Systems

- Limits use of alternative systems unless they can be inspected.
- Sets forth installation and inspection training rules.
- Describes the sanitary permit, plan review and approval requirements.
- Details construction inspections and gives construction requirements.
- All septic systems must have an approved management plan, and the department must be notified when elements of this plan are completed.
- Lists approved alternative technologies.
- Requires the health departments to monitor technologies to ascertain their effectiveness.

The foregoing examples are given to assist Kent County as it embarks on improvements to its current OSDS management practices.

12. Need for a Kent County OSDS Management Ordinance

It is important to realize that the need for an OSDS management ordinance is driven by the following factors:

- People will continue to live and developers will continue to develop homes outside areas in Kent County where public sewers are available.
- Even the best of individual OSDSs can be damaging to the environment compared to most properly operated community or municipal treatment systems.
- Most individual OSDSs are not professionally managed or inspected.
- Once an OSDS is approved and installed, currently there is little anyone can do thereafter to stop a homeowner from polluting the environment by improper operation or maintenance.
- Disposal of septage generated from individual OSDS is a growing problem in West Michigan and statewide.

It should be noted that once any community collection and treatment system is implemented, the local unit of government is bound by law to guarantee (usually via a back-up agreement to the developer or the developer's O&M agent) that the system will be properly operated.

There is currently proposed legislation in Michigan's Senate (SB 107) that would establish statewide standards for OSDSs, require inspections of OSDSs when a home is sold, and require educational materials to homeowners.

Based upon the most recent literature, the following discussion highlights items and considerations that are recommended in a successful OSDS and septage management program.

13. Elements of a Successful Management Program

The philosophy behind a management approach is to:

- Develop accurate inventories of existing OSDSs,
- Operate and maintain each system in a manner that assures proper performance,

- Identify high-risk areas, high density areas and advanced treatment systems that will effectively treat sewage, or protect sensitive areas with zoning, and
- Develop an effective septage management program.

The success of a community's OSDS management program (and, therefore, the success of its on-site systems) greatly depends upon

- Comprehensive planning,
- Public acceptance,
- Local political support,
- Adequate funding,
- A trained and capable staff, and
- Clearly defined legal authority, regulations, and enforcement mechanisms.

In other words, to be successful, management programs must be enforceable, measurable, publicly accepted, politically feasible, and affordable.

Existing management programs vary greatly in scope and character, depending upon the individual needs of communities. Over the years, it has become clear that successful programs tend to include many of the following elements:

- Clear and specific program goals;
- Guidelines for site evaluation, design, and construction;
- Construction oversight;
- Performance requirements;
- Regular system monitoring, inspections and qualified operations & maintenance;
- Septage management;
- Licensing or certification of all service providers;
- Incentives and effective mechanisms for enforcement; and corrective action;
- Adequate records management;
- Public education and outreach; and
- Financial resources to support the management program.

14. EPA Guidelines for Managing OSDSs

OSDSs and decentralized sewage systems can be the most practical and least expensive way to treat household sewage in small communities. But when the need for proper management is ignored, communities often put local water quality and public health at risk.

In 1972, Michigan's Legislature passed Bill No. 6259 which states that septic systems are subject to failure and that failure poses a threat to the public health, safety and welfare; presents a potential for ill health; transmission of disease; mortality and potential economic blight and constitutes a threat to the quality of the State's surface and groundwaters.

For this reason, the U.S. Environmental Protection Agency (EPA) has developed a draft of proposed *Guidelines for Management of On-site/Decentralized Sewage Systems*. The purpose of these voluntary guidelines is to improve the performance of OSDSs and decentralized sewage systems by improving local management programs.

The EPA draft guidelines present five incremental levels of "model" management programs, from basic information collection and maintenance awareness, to the most comprehensive programs in which utilities own and manage systems. Each model program includes a set of management objectives and elements and activities aimed at accomplishing the objectives.

The model programs are meant to help communities identify their management objectives, evaluate whether or not their current programs are adequate, and choose an appropriate management program that will help them achieve their objectives and protect public health and the environment.

EPA's proposed five model management programs are described in the following series of tables:

Table 14-1 Overview of EPA Model Program objectives and basic features

Program type	Program objectives	Basic program features
Model Program 1 Prescriptive requirements only	Owner awareness of permitting program, installation, and O&M needs. Compliance with codes, regulations.	Only conventional systems allowed. Prescriptive design/site requirements. Owner education to improve O&M. Only construction inspections and complaint evaluations.
Model Program 2 Prescriptive/with specified alternative pretreatment systems where requirements are not quite met	Maintain prescriptive program for sites that meet code criteria. Permit only approved alternative systems on sites not quite meeting criteria.	Prescriptive design/site requirements. Allowances for approved alternatives where code not met. O/M contracts for alternative systems. Inspections & owner education as in above.
Model Program 3 Management through operating permits	System design based on site conditions and performance requirements. System performance assumed by O&M task completion, but may be verified through permit renewal inspections.	Wider variety of designs allowed. Performance governs operating permit renewal. OSDS monitoring may be required. Property sale, change-of-use triggers compliance-assurance inspection.
Model Program 4 Responsible third party operation and maintenance	Responsible public or private entity assumes O&M and inspection/monitoring responsibilities for all systems in management area.	Performance governs acceptability. Operating permits ensure compliance. All systems are inspected regularly. Monthly/yearly fees support program. Owner relieved of responsibility for scheduling O/M tasks.
Model Program 5 Responsible third party ownership	Public or private utility owns and operates all systems in management area. Similar to centralized sewage system service approach.	Performance governs acceptability. All systems are inspected regularly. Monthly/yearly fees support program. Users relieved of O&M responsibilities. Utility finances installation & repairs.

Table 14-2 Summary of EPA model program #1 for managing onsite/decentralized sewage treatment systems.

Model Program	Management Objectives	Typical Application	Benefits	Limitations
1	**SYSTEM INVENTORY AND AWARENESS OF MAINTENANCE NEEDS** Ensures that conventional onsite/decentralized systems are sited and installed properly in accordance with appropriate state/local regulations and codes and are periodically inspected, maintained, and repaired as necessary. Regulatory authority is aware of the location of systems and periodically provides owners with operation and maintenance information.	Areas of low environmental sensitivity, where conventional OSDSs are adequate to protect water quality and public health.	Relatively easy and inexpensive to implement and maintain. (Programs are based upon conventional, prescriptive system designs that rely upon conservative site criteria and system design requirements promulgated in codes.)	No mechanism to ensure operating compliance of systems. No mechanism to identify failures when they occur. Limits building sites to those meeting prescriptive requirements.

Table 14-3 Summary of EPA model program #2 for managing onsite/decentralized sewage treatment systems.

Model Program	Management Objectives	Typical Application	Benefits	Limitations
2	**MANAGEMENT THROUGH MAINTENANCE CONTRACTS** Allows the use of more complex mechanical treatment components in areas of higher density or some environmental sensitivity. Requires maintenance contracts to be maintained between the owner and equipment manufacturer/ supplier or service provider over the life of all systems.	Areas such as wellhead or source protection areas, where sites are marginally suited for conventional systems, requiring alternative, enhanced treatment.	Reduces the risk of failure through the requirement for routine maintenance of mechanical components by skilled personnel.	Local agency may have difficulty tracking and enforcing compliance with the maintenance requirements and/or contract.

Table 14-4 Summary of EPA model program #3 for managing onsite/decentralized sewage treatment systems.

Model Program	Management Objectives	Typical Application	Benefits	Limitations
3	**MANAGEMENT THROUGH OPERATING PERMITS** Allows the use of onsite/decentralized treatment on sites with a greater range of characteristics than allowed by prescriptive codes. Establishes specific and measurable performance requirements, renewable operating permits, and regular compliance monitoring reports, in addition to maintenance contracts.	Moderately sensitive areas, such as where conventional systems are a potential threat to drinking waters, or where more complex designs are needed to meet specific performance requirements based on site characteristics.	Increases the range of sites suitable for OSDSs. Addresses problem where owner may not manage system adequately and continues to operate a non-compliant system; reduces the risk of failures by mandating that performance requirements be met.	Needs a higher level of technical/engineering expertise to implement.

Table 14-5 Summary of EPA model program #4 for managing onsite/decentralized sewage treatment systems.

Model Program	Management Objectives	Typical Application	Benefits	Limitations
4	**RESPONSIBLE THIRD-PARTY OPERATION AND MAINTENANCE** Ensures that onsite/decentralized treatment systems consistently meet their performance requirements through the creation of public/private responsible management entities (RMEs) that are responsible for the performance of systems within the service area. The RMEs are issued operating permits for the systems and maintain them, but system ownership remains with individual property owners.	Areas where there is suspected impairment of receiving waters such as sole source aquifers, critical aquatic habitats, outstanding national resource waters, or other areas where the environmental and technological concerns require reliable, long-term system O&M.	Responsibility for operation and maintenance is transferred from the owner to an RME that has an economic incentive to comply with the operating permit. Routine inspections may identify obvious structural or process problems before system failure occurs. Reduced number of permits requiring oversight by regulatory agency.	Additional regulatory oversight needed to evaluate and ensure that the RME is technically and financially viable. Potential conflicts between owner and the RME.

Table 14-6 Summary of EPA model program #5 for managing onsite/decentralized sewage treatment systems.

Model Program	Management Objectives	Typical Application	Benefits	Limitations
5	**RESPONSIBLE THIRD-PARTY OWNERSHIP AND MANAGEMENT** Provides professional management of the site evaluation, design, construction, operation, maintenance, etc. of OSDSs through the creation of public/private RMEs that own, operate, maintain, and manage systems within the service area.	Same environmental and public health conditions as under Model Program 4.	Simulates municipal model by transferring all responsibility from property owner to professional mgmt. entity, reducing risk of non-compliance to lowest level. Allows effective area-wide sewage planning through integration of onsite/decentralized systems with conventional sewerage. Avoids conflicts between owner and operator.	Property owner may oppose RME easement and access to property for system installation, repair, inspection, and management. Additional regulatory oversight needed to evaluate and ensure that the RME is technically and financially viable. Greater financial investment by RME due to purchase of systems and components.

Table 14-7 Key elements of an onsite/decentralized management program

Program element	Purpose
Planning	Ensure coordination with state, regional, and local entities involved in characterizing cumulative impacts; promote better links between system design and conditions of the receiving environment.
Performance Requirements	Assure that systems meet specific treatment standards based on projected impacts to receiving waters.
Site Evaluation	Characterize physical, hydrological, and other conditions of the treatment site and the sewage to be treated.
Design	Establish procedures to approve engineered designs capable of meeting specific and measurable performance requirements.
Construction	Provide assurance that systems are built and installed in accordance to the design specified in the system construction permit.
Operation & Maintenance	Ensure that systems are operated and maintained in a manner consistent with their design and construction.
Residuals Management	Assure compliance with 40 CFR Part 503 and state or local codes dealing with septage or sewage sludge transport and disposal.
Certification/Licensing	Promote professionalism by establishing credentialing program for management entity staff and service providers.
Education/Training	Provide operation/maintenance information to system owners and support educational programs for service providers and staff.
Inspections/Monitoring	Identify problems before they threaten public health or water quality through regularly scheduled inspections and monitoring programs.

Corrective Actions	Assure that required operation, maintenance, repair, or replacement tasks are completed promptly and in accordance with protocols.
Record keeping & Reporting	Create and track systems location and design inventory with all service provider information and I/M data for management & reporting.
Financial Assistance	Support development of low-interest loan or cost-share programs to pay for system repair, replacement, and operation /maintenance.

Table 14-8 Model Program 1: System Inventory and Awareness of Maintenance Needs

Objective: To ensure conventional OSDSs are sited and installed properly in accordance with appropriate State/local regulations and codes; and are periodically inspected and repaired as necessary. Regulatory agency is aware of the location of systems and periodically provides owners with operation and maintenance information.

PROGRAM ELEMENT	ACTIVITY
Planning	Coordinate with State, and local planning and zoning, water quality, and other water use-related agencies.
Performance Requirements	Prevent direct and indirect human contact with raw and treated sewage through separation requirements.
Site Evaluation	Codify prescriptive requirements for evaluation procedures and acceptable setback criteria to minimize impacts to groundwater and aquatic resources.
Design	Codify designs suitable for sites meeting specific criteria**.**
Construction	Administer program for construction permits including agency review and acceptance of proposed system plans with a final construction inspection for compliance assurance and inventory data collection.
Operation & Maintenance	Educational materials on onsite system care and complaint procedures provided to owners; establish program for owner reminders to perform scheduled preventive maintenance.
Residuals Management	Assure residuals are used/disposed of in accordance with 40 CFR Part 503 and applicable State/local requirements; create and administer tracking system for residuals hauling and disposal**.**
Certification/Licensing	Administer any existing certification/licensing programs
Public Education/Involvement	Educate owners on purpose, use, and care of system; send reminders to owners of needed O/M.

Inspections/Monitoring	Administer program for homeowner, point-of-sale, change-in-use and complaint investigation inspections.
Corrective Actions	Negotiate compliance schedules for correcting documented failures. Administer enforcement program with fines and/or penalties for failure to comply with requirements in timely manner.
Record keeping & Reporting	Maintain construction permit file including site evaluation report and record drawings of system.
Financial Assistance	Provide inventory of available financial assistance programs to owners.

Table 14-9 Model Program 2: Management Through Maintenance Contracts

Objective: To allow the use of more complex mechanical treatment options through the requirement that maintenance contracts be maintained between the owner and equipment manufacturer/supplier or service provider over the life of the system.

PROGRAM ELEMENT	ACTIVITY
Planning	Coordinate with State and local planning and zoning, water quality, and other water use-related agencies.
Performance Requirements	Prevent direct and indirect human contact with raw and treated sewage. Specify alternative technologies and O/M for non-compliant sites.
Site Evaluation	Codify prescriptive requirements for evaluation procedures and acceptable setback criteria to minimize impacts to groundwater and aquatic resources.
Design	Codify designs suitable for sites meeting specific criteria**.** Specify alternative treatment systems and site criteria for their application.
Construction	Administer program for construction permits including agency review and acceptance of proposed system plans with a final construction inspection for compliance assurance and inventory data collection.
Operation & Maintenance	Educational materials on onsite system care and complaint procedures provided to owners; establish program for owner reminders to perform scheduled preventive maintenance; enact requirement for private maintenance contract between owner and trained service provider.
Residuals Management	Assure residuals are used/disposed of in accordance with 40 CFR Part 503 and applicable State/local requirements; create and administer tracking system for residuals hauling and disposal**.**

Certification/Licensing	Administer existing certification/licensing programs for site evaluators, installers, septage haulers, and inspectors; review O/M tracking inputs as basis for local certification.
Public Education/Involvement	Educate owners on purpose, use, and care of system; send reminders to owners of needed O/M.
Inspections/Monitoring	Administer program for homeowner, point-of-sale, change-in-use and complaint investigation inspections; make O/M service reports include inspection information.
Corrective Actions	Negotiate compliance schedules for correcting documented failures. Administer enforcement program with fines and/or penalties for failure to comply with requirements in timely manner.
Record keeping & Reporting	Maintain construction permit file including site evaluation report and record drawings of system. Administer tracking system for private maintenance contract compliance.
Financial Assistance	Provide inventory of available financial assistance programs to owners.

Table 14-10 Model Program 3: Management Through Operating Permits

Objective: To allow the use of OSDSs on sites with a greater range of characteristics than allowed by prescriptive codes through the establishment of specific and measurable performance requirements, renewable operating permits, and regular compliance monitoring reports.

PROGRAM ELEMENT	ACTIVITY
Planning	Coordinate development siting and provide critical info with State and local planning and zoning, water quality, and other water use-related agencies.
Performance Requirements	Establish performance and maintenance requirements specific to individual systems, and enforce through use of operating permits.
Site Evaluation	Codify requirements for site evaluation procedures.
Design	Same as Models 1 & 2, plus establish procedures to approve engineered designs capable of meeting specific performance requirements.
Construction	Administer program for construction and operating permits and inventory data collection with more construction inspections, require installer certification/licensing, and institute GIS-based data tracking.
Operation & Maintenance	Administer program for limited term operating permits that are renewable upon documented compliance with permit conditions; require inspections at time of property transfer and other occasions; and institute O/M performance reporting.
Residuals Management	Assure residuals are used/disposed of in accordance with 40 CFR Part 503 and applicable State/local requirements; create and administer tracking system for residuals hauling and disposal; require use of only certified/licensed pumpers (already law in Michigan).

Certification/Licensing	Administer certification/licensing program for site evaluators, designers, installers, septage haulers, and inspectors; review performance regularly and revoke approvals based on inspections and performance.
Public Education/Training	Create educational materials for owners on purpose, use and care of system that are specific to region; provide updated information on approved service providers; sponsor public workshops that reinforce need to assure system performance by identifying potential impacts of non-compliance.
Inspections/Monitoring	Administer program for homeowner, point-of-sale, change-in-use and complaint investigation inspections; require treatment system inspections and monitoring as part of operating permit renewal.
Corrective Actions	Negotiate compliance schedules for correcting failures; administer enforcement program; tie corrective actions to revocable permit program.
Record keeping & Reporting	Maintain construction permit file including site evaluation report and record drawings of system; administer complete service and inspection tracking system for operating permits.
Financial Assistance	Provide inventory of available financial assistance programs to owners; work with local lending institutions to assist owners in getting low-interest loans for system repairs.

Table 14-11 Model Program 4: RME Operation and Maintenance

Objective: To ensure that onsite/decentralized treatment systems consistently meet their performance requirements through the creation of public/private utilities that would be responsible for the performance of systems within the service area.

PROGRAM ELEMENT	ACTIVITY
Planning	Coordinate with State and local planning and zoning, water quality, and other water use-related agencies. Assess vulnerability and treatment requirements for different zones of vulnerability.
Performance Requirements	Establish measurable performance and maintenance requirements specific to the receiving environment and monitor performance and water quality impacts.
Site Evaluation	Codify protocols for site evaluation.
Design	Establish protocols to approve engineered designs capable of meeting specific and measurable performance requirements**.**
Construction	Develop and administer protocol for construction and operating permits including extensive construction oversight for compliance assurance and develop or support ongoing training/certification programs for installers.
Operation & Maintenance	Establish protocols for O/M performance and reporting; support training and licensing programs for service providers; and institute extensive inspection programs to review O/M performance protocols.
Residuals Management	Provide protocols to assure residuals are used/disposed of in accordance with all applicable requirements; create and administer inspection and tracking system for residuals hauling and disposal; provide specific training and licensing/certification for service providers and inspectors.

Certification/Licensing	Develop certification/licensing review and renewal programs for site evaluators, designers, installers, operators, septage haulers, and inspectors; support and implement site-specific training and licensing programs.
Public Education/Involvement	Same as #3 above, plus maximize public involvement in RME creation and implementation through advisory boards, regular RME performance reviews, and in the design process; maximize outreach.
Inspections/Monitoring	Develop and implement protocols and requirements for treatment system monitoring and inspections; conduct monitoring of ground and surface water as directed by permit; and regularly review results for possible program adjustments.
Corrective Actions	Develop and implement protocols that delineate enforcement process with citizen involvement and citizen review; utilize powers to assure timely correction of problem systems.
Record keeping & Reporting	Maintain tracking system of inventory, all service provider and inspection actions for operating permits; record and analyze environmental monitoring and RME financial data; and share and review data regularly.
Financial Assistance	Provide inventory of available financial assistance programs to owners; develop low-cost loan programs for owners to make repairs; work with state and local governments to establish low- or no-interest funds for owners, develop rate structure that allows assistance to needy

Table 14-12 Model Program 5: RME Ownership and Management

Objective: To provide professional management of the sighting, design, construction, operation and maintenance of onsite/decentralized systems through the creation of public/private utilities that own and manage individual systems within the service area.

PROGRAM ELEMENT	ACTIVITY
Planning	Coordinate with State and local planning and zoning, water quality, and other water use-related agencies. Provide area-wide comprehensive sewage planning via vulnerability assessment and treatment needs for each zone and service area facility planning.
Performance Requirements	Establish measurable performance and maintenance requirements specific to the receiving environment and monitor performance and water quality impacts.
Site Evaluation	Codify protocols for site evaluation.
Design	Establish protocols to approve engineered designs capable of meeting specific and measurable performance requirements**.**
Construction	Develop and administer protocol for construction and operating permits including extensive construction oversight for compliance assurance and develop or support ongoing training/certification programs for installers.
Operation & Maintenance	Establish protocols for O/M performance and reporting; support training and licensing programs for service providers; and institute extensive inspection programs to review O/M performance protocols.
Residuals Management	Provide protocols to assure residuals are used/disposed of in accordance with all applicable requirements; create and administer inspection and tracking system for residuals hauling and disposal; provide specific training and licensing/certification for service providers and inspectors.

Certification/Licensing	Develop certification/licensing review and renewal programs for site evaluators, designers, installers, operators, septage haulers, and inspectors; support and implement site-specific training and licensing programs.
Public Education/Involvement	Same as #3 above, plus maximize public involvement in RME creation and implementation through advisory boards, regular RME performance reviews, and in the design process; maximize outreach.
Inspections/Monitoring	Develop and implement protocols and requirements for treatment system monitoring and inspections; conduct monitoring of ground and surface water as directed by permit; and regularly review results for possible program adjustments.
Corrective Actions	Develop and implement protocols that delineate enforcement process with citizen involvement and citizen review; utilize powers to assure timely correction of problem systems.
Record keeping & Reporting	Maintain tracking system of inventory, all service provider and inspection actions for operating permits; record and analyze environmental monitoring and RME financial data; and share and review data regularly.
Financial Assistance	Develop rate structure that permits assistance to low-income citizens; guarantee loans to covered citizens in need; broker intramural assistance programs.

15. Key Elements of an Onsite/Decentralized Management Program

The following charts and tables show the degree to which each key success element of an onsite/decentralized management program varies from basic management through advanced management approaches.

Again, the key success elements are:

- Planning
- Performance Requirements
- Site Evaluation
- Design
- Construction
- Operation & Maintenance
- Residuals Management
- Certification/Licensing
- Education/Training
- Inspections/Monitoring
- Corrective Actions
- Record keeping & Reporting
- Financial Assistance

Table 15-1 Planning activities

Basic approach	Intermediate approach	Advanced approach
Inventory and characterize all systems in the management jurisdiction; provide regulatory authorities with these data.	Coordinate development siting with regional planning office. Identify critical areas and sites requiring higher levels of treatment.	Assign values and assess vulnerabilities of receiving waters. Establish overlay treatment zones based on environmental sensitivity & health impact potential. Identify treatment standards for each zone based on health/water resource risks.

Table 15-2 Performance requirements approaches

Basic approach	Intermediate approach	Advanced approach
Prevent direct and indirect contact with raw or partially-treated sewage through prescribed setbacks and separation distances.	Specify alternative technologies for certain sites or conditions that do not meet prescribed separations. Establish management or maintenance requirements to ensure proper system functioning.	Characterize individual and cumulative onsite system impacts on regional water resources. Establish numeric and/or narrative treatment performance standards based on site conditions and receiving waters. Develop protocols for confirming or amending performance requirements through watershed or aquifer monitoring.

Table 15-3 Site evaluation approaches

Basic approach	Intermediate approach	Advanced approach
Require percolation and other soil tests for soil-based systems. Establish minimum setback requirements from ground and surface waters.	Prescribe minimal site conditions (e.g., vertical and horizontal setbacks, soil type and depth, slope and landscape position ranges and testing methods, e.g., test pits. Prescribe allowances for alternative systems for sites not quite meeting threshold conditions.	Provide protocol for comprehensive soil and subsurface analyses. Identify and characterize critical design and performance boundaries analysis. Provide evaluation protocol on which proposed designs will be judged.

Table 15-4 Site characterization and assessment activities for OSDS applications

Preliminary activities	Information from research
Preliminary review	Site survey map Soil survey, USGS topographic map Aerial photos, wetland maps Source water protection areas Natural resource inventories Applicable regulations/setbacks Hydraulic loading rates Criteria for alternative OSDSs Size of house/facility Loading rates, discharge types Planned location of water well
Scheduling	Planned construction schedule Date and time for meeting
Field activities	**Information from field study**
Identification of unsuitable areas	Water supply separation distances Regulatory buffer zones/setbacks Limiting physiographic features
Subsurface investigations	Ground water depth from pit/auger Soil profile from backhoe pit Presence of high water table Percolation tests
Identification of recommended SSIS site	Integration of all collected data Identification of preferred areas Assessment of gravity-based flow Final selection of OSDS site

Table 15-5 Design program approaches.

Basic approach	Intermediate approach	Advanced approach
Permit only soil-discharging systems on sites meeting prescriptive criteria.	Allow limited number of prescribed alternative designs on sites meeting specific criteria for each. Provide potential acceptance review of engineered alternative designs if existing options are not appropriate.	Institute protocol whereby site conditions and treatment performance requirements define system design. Specify design performance requirements for identified treatment zones via numeric and/or narrative criteria. Establish protocols for regular review of designs to determine compliance with performance requirements.

Table 15-6 Construction/installation approaches

Basic approach	Intermediate approach	Advanced approach
Require certification that construction or installation of the system meets the required design. Inspect system prior to backfilling to confirm that installation or construction complies with design. Establish construction permit program to collect site and system information.	Implement certification and/or licensing program for installers. Develop detailed, GIS-referenced database to collect and track construction, operation, maintenance, and other information.	Create protocols for installation procedures and contingencies. Develop or support ongoing training for installers through local presentations, state training centers, or other venues.

Table 15-7 Operation and maintenance approaches

Basic approach	Intermediate approach	Advanced approach
O & M educational materials circulated to system owners; complaint response protocols established; reminders sent to system owners when septic tank pump outs due.	Maintenance contracts required for more complex, mechanical systems. Inspection of all systems required at time of property transfer. Renewable, revocable operating permit system implemented is renewed (e.g., every 3-5 years) upon performance of O/M tasks.	Trained, certified service providers handle O & M tasks for all systems in accordance with established protocols. Training and certification programs provided and/or supported by RME through training centers or other means.

Table 15-8 Residuals management approaches

Basic approach	Intermediate approach	Advanced approach
Assure residuals are being reused or disposed of in accordance with applicable requirements. Educate and remind owners of the need to pump septic tanks at regular intervals.	Require homeowners to demonstrate and service providers to report that tanks are pumped at appropriate intervals (e.g., every 3 to 5 years) in order to renew operating permit. Require use of only licensed/certified pumpers.	Administer tracking, inspection and monitoring system for all aspects of residuals hauling and disposal. Register and provide basic orientation and training for all pumpers/haulers.

Table 15-9 Certification and licensing approaches

Basic approach	Intermediate approach	Advanced approach
Support registration/licensing process for service providers with basic levels of skill and experience.	Support/sponsor education and training programs required for certificate or license. Certified or licensed service providers contingent on accuracy of reporting and tracking inputs.	Develop inspection and performance review program for approved service providers in district. Support training programs specific to district for service providers seeking to perform services.

Table 15-10 Public education and involvement approaches

Basic approach	Intermediate approach	Advanced approach
Acquire and circulate printed materials on basic system operation and maintenance needs; send reminders to owners when O/M should be scheduled.	Develop specific educational materials with information on local impacts. Provide local workshops for system owners on system operation, maintenance, and inspection and potential environmental impacts of non-performance.	Involve homeowners in management program development and implementation on advisory boards, variance/complaint panels, etc. Work with homeowners in design phase and in regular program reviews.

Table 15-11 Inspection and monitoring approaches

Basic approach	Intermediate approach	Advanced approach
Educate and request homeowners to conduct basic inspections of system and monitor sludge/ scum buildup in tank. Require inspections at time of property transfer, change in use, and complaint investigation.	Specify regular reporting on condition of complex or mechanized systems as part of the O/M requirements; develop electronic inspection reporting program via service provider input. Require inspection and monitoring of pretreatment systems as part of operating permits.	Conduct aquifer or watershed monitoring in addition to pretreatment monitoring. Regularly evaluate monitoring data and permit requirements in order to determine if any adjustments are needed to program.

Table 15-12 Corrective action approaches

Basic approach	Intermediate approach	Advanced approach
Negotiate compliance schedules for correcting documented failures. Administer enforcement program with fines and/or penalties for failure to comply with requirements in a timely manner.	Develop revocable operating permit program to assure corrective actions through required inspections. Create electronic reporting system to track corrective measures with input from staff and service providers.	Develop clear and concise protocols with citizen review to provide step-by-step definition of enforcement action sequence. Enable corrective actions to be implemented by RME or third party service providers with payment assured by power to impose property liens.

Table 15-13 Compliance assurance approaches and their implications

Collection method	Description	Advantages	Disadvantages
Liens on property	Local governing entity (with taxing powers) may add the costs of performing a service or past unpaid bills as a tax on the property.	Has serious enforcement ramifications and is enforceable.	Local government may be reluctant to apply this approach unless the amount owed is substantial.
Recording violations on property deed	Copies of violations can, through administrative or legislature requirement, be attached to the property title (via registrar of deed).	Relatively simple procedure. Effectively limits the transfer of property ownership.	Can be applied to enforce sanitary code violations; may be ineffective in collecting unpaid bills.
Presale inspections	Inspections of onsite sewage systems are conducted prior to transfer of property, or when property use changes significantly.	Notice of violation may be given to potential buyer at the time of system inspection; seller may be liable for repairs.	Can be difficult to implement due to additional resources needed. Inspection fees can help cover cost.
Termination of public services	A customer's water, electric, or gas service may be terminated (as applicable).	Effective procedure, especially if management entity is responsible for water supply.	Termination of public services poses potential health risks. Cannot terminate water service if property owner has well.
Fines	Monetary penalties for each day of violation, or as a surcharge on unpaid bills.	Fines can be levied through local judicial system as a result of enforcement of violations.	Effectiveness will depend on the authority vested in the entity issuing the fine.

Table 15-14 Record keeping and reporting approaches

Basic approach	Intermediate approach	Advanced approach
Maintain system inventory and site evaluation / construction permit files.	Administer maintenance reminder program. Develop reporting approaches to collect information from all service providers. Institute electronic reporting and database system for all relevant program functions.	Provide existing system and watershed characterization information and data to planning staff. Develop interactive and real-time information tracking programs to maximize field and system productivity and public education/involvement.

Table 15-15 Financial assistance approaches.

Basic approach	Intermediate approach	Advanced approach
Provide a list of lending institutions to system owners.	Work with local lenders to help them establish a low interest loan program for system repair or replacement. Seek grants or other funding to help owners upgrade or replace systems.	Work with state or local governments to develop low interest loan program. Create cost-share program to help low income owners pay for system repairs or replacement. Implement management fees that cover inspections, repair, replacement, etc.

Table 15-16 Advantages and disadvantages of various funding sources

Funding source	Description	Advantages	Disadvantages
Loans	Money lent with interest; can be obtained from federal, state, and commercial lending institution sources.	State and federal agencies can often issue low-interest loans with a long repayment period. Loans can be used for short-term financing while waiting for grants or bonds.	Loans must be repaid with interest. Lending agency might require certain provisions (e.g., power to levy taxes) to assure managing agency of ability to repay the debt. Commercial loans generally are available at higher interest rates and might be difficult to obtain without adequate collateral.
Grants	Funds awarded to pay for some or all of a community project.	Funds need not be repaid. Small communities might be eligible for many different grants to build or upgrade their environmental facilities.	Applying for grants and managing grant money require time and money. Sometimes grant-imposed wage standards apply to an entire project even if the grant is only partially funding the project; this increases project expense. Some grants require use of material and design requirements that exceed local standards. (Grants might result in higher costs.)
General obligation bonds	Bonds backed by the full faith and credit of the issuing entity. Secured by the taxing powers of the issuing entity. Commonly used by local governments.	Interest rates are usually lower than those of other bonds. Offers considerable flexibility to local governments.	Community debt limitations might restrict use. Voters often must approve of using these bonds. Usually used for facilities that do not generate revenues.

Revenue bonds	Bonds repaid by the revenue (user fees) of the facility.	Can be used to circumvent local debt limitation.	Do not have full faith and credit of the local government. Interest rates are typically higher than those of general obligation bonds.
Special assessment bonds	Bonds payable only from collection of special assessments. Property taxes cannot be used to pay for these.	Removes financial burden from local government. Useful when direct benefits can be readily identified.	Can be costly to individual landowners. Might be inappropriate in areas with non-uniform lot sizes. Interest rate might be relatively high.
Bond bank monies	States use taxing power to secure a large bond issue that can be divided among communities.	States can get the large issue bond at a lower interest rate. The state can issue the bond in anticipation of community need.	Many communities compete for limited amount of bond bank funds.

Table 15-17 General context for developing and implementing management actions.

Generalized steps	Examples of typical activities or processes
Create a management partnership or entity	Determine general management goals and approach. Identify key stakeholders and other potential partners (e.g., regulatory authority, planning departments, development companies, water quality agencies, service providers, existing management entities). Notify stakeholders and partners of assessment, problem identification, and remediation approaches under consideration. Convene partnership or establish management entity to discuss management goals and possible approaches.
Assess relative health and environmental risks	Explore relative uses and value of receiving waters (i.e., drinking water source, recreational waters, and aesthetic attributes). Identify applicable surface or ground water quality standards. Review health risk and water resource monitoring and assessment information; determine possible onsite/decentralized system impacts. Evaluate relative vulnerability of water resources based on monitoring, assessment, modeling, or other existing/new information.
Identify, prioritize, and target key problem areas	Synthesize valuation, vulnerability, monitoring/assessment, and other information to identify real and potential problem sites or areas. Prioritize (e.g., high/medium/low) or otherwise group identified problem sites or areas for remedial action or further study. Investigate and identify resources to support remedial action or study; secure commitments for resource deployment from partners or other sources.

Develop goals to address identified problems	Establish performance requirements based on health and water resource assessment information and evaluation of onsite system risk potential. Review other program elements (e.g., site evaluation, design, construction, operation/maintenance, residuals management, certification/licensing, education/training, inspections/monitoring, corrective actions, record keeping and reporting, financial assistance) to ensure programmatic support for performance requirements.
Select management actions and devise implementation plan	Identify selected management actions or approaches for implementation. Solicit support for implementation among stakeholder or partner groups or support through other identified internal/external funding mechanisms.
Implement selected actions; monitor progress and adapt as necessary	Activate or implement management practices/actions, targeting highest priority sites or areas. Monitor progress on selected indicators; evaluate progress and adapt approach as indicated by evaluation results and stakeholder input.

Table 15-18 Organizational, functional, and structural dimensions of management

Issue	Questions to be addressed
Time frame	Will the planned management program structure be permanent or temporary? What is the timeline for developing the management partnership or entity?
Service area	What area will be served by the management program? Is this area compatible with a local public jurisdiction that could assume program responsibilities? How is the size of the jurisdiction related to the type of management approaches (e.g., system designs, staffing, regulatory controls) that can be used?
Purpose	What general problems are issues will be addressed by the management program? Should the management program be limited to onsite/decentralized sewage treatment, or should other sewage/stormwater issues be included? Which program elements and range of approaches will the program include?
Structure	Can existing entities be modified or coordinated to provide management services or will a new entity be needed? How will elements of the management and management information program be staffed, administered, and funded? Will formal agreements, ordinances, or other legal mechanisms (e.g., articles of incorporation, public charter) be required to create structural elements of the management program?

Authority/liability	Which systems will be under the jurisdiction of the management program? Will the treatment systems be privately or publicly owned? How will the systems be planned, designed, installed, operated, maintained, inspected, and repaired/replaced, if necessary? What is the relationship between the management program or management entity and the regulatory authority? Will formal agreements, ordinances, or other legal mechanisms (e.g., with system or property owners) be required to implement elements of the management program?

Table 15-19 Organizational approaches, responsibilities, and other considerations in selecting a management entity.

	State Agency	County	Municipality	Special district	Improvement District	Public authority	Public nonprofit corporation	Private nonprofit corporation	Private for-profit corporation
Responsibilities	Enforcement of state laws and regulations.	Enforcement of state codes, county ordinances.	Enforcement of municipal ordinances; may enforce state/county codes.	Powers defined; may include code enforcement (e.g., sanitation district).	State statutes define extent of authority.	Fulfilling duties specified in enabling instrument.	Role specified in articles of incorporation (e.g., homeowner association).	Role specified in articles of incorporation (e.g., homeowner association).	
Financing capabilities	Usually funded through appropriations and grants.	Able to charge fees, assess property, levy taxes, issue bonds, appropriate general funds.	Able to charge fees, assess property, levy taxes, issue bonds, appropriate general funds.	Able to charge fees, assess property, levy taxes, issue bonds.	Can apply special property assessments, user charges, and other fees. Can sell bonds.	Can issue revenue bonds, charge user and other fees.	Can charge fees, sell stock, issue bonds, and accept grants/loans.	Can charge user fees, accept grants/loans.	Can charge fees, sell stock, accept some grants/loans.
Advantages	Authority level and code enforceability are high; programs can be standardized; scale efficiencies.	Authority level and code enforceability are high; programs can be tailored to local conditions.	Authority level and code enforceability are high; programs can be tailored to local conditions.	Flexible, renders equitable service (only those receiving services pay); simple and independent approach.	Can extend public services without major expenditures; service recipients usually supportive.	Can provide service when government unable to do so; autonomous, flexible.	Can provide service when government unable to do so; autonomous, flexible.	Can provide service when government unable to do so; autonomous, flexible.	Can provide service when government unable to do so; autonomous, flexible.
Disadvantages	Sometimes too remote; not sensitive to local needs and issues; often leaves enforcement up to local entities.	Sometimes unwilling to provide service, conduct enforcement; debt limits could be restrictive.	Might lack administrative, financial, other resources; enforcement might be lax.	Can promote proliferation of local government, duplication/fragmentation of public services.	Contributes to fragmentation of government services; can result in administrative delays.	Financing ability limited to revenue bonds; local government must cover debt.	Local governments might be reluctant to apply this concept.	Services could be of poor quality or could be terminated.	No enforcement powers, company might not be fiscally viable; not eligible for major grant/loan programs.

16. Recommendations for Kent County

Based upon the foregoing information, it is recommended that Kent County establish a phased-in program to manage OSDSs and the residuals (septage and biosolids) created by OSDSs.

16.1. Phase I

16.1.1. Undertake further study to confirm (for purposes of information and public education):

16.1.1.1. Current OSDS failure rates in Kent County;

16.1.1.2. The amount of septage currently generated in Kent County annually under present management conditions;

16.1.1.3. The amount of this septage, which is presently land-applied, and which is treated either at a municipal WWTP or private treatment facility;

16.1.1.4. Current acreage and location of approved and/or active land application sites;

16.1.1.5. The amount of septage that is currently land-applied in winter months and where;

16.1.1.6. Number and location of high nitrate levels (>10ppm) in drinking water wells;

16.1.1.7. Real estate transfer data and occupancy permits issued for Kent County homes served by OSDSs;

16.1.1.8. Actual case studies of OSDS damage to health or environmental resources, especially those where E. coli were found in surface waters; or septic systems failed a dye test and affected surface waters, for example:

16.1.1.8.1. Blythefield Acres

16.1.1.8.2. Bear Creek

16.1.1.8.3. Plaster Creek

16.1.1.8.4. Rouge River demonstration project

16.1.1.8.5. Shiawassee County

16.1.1.8.6. Other available local studies

16.1.1.9. The number of *projected* OSDSs in Kent County, and the amount of septage generated annually, based upon a twenty- to fifty-year growth model.

16.1.2. Create a centralized GIS-based database that includes critical information about *all* OSDSs in Kent County.

16.1.2.1. Size

16.1.2.2. Type

16.1.2.3. Location on property

16.1.2.4. Installation date

16.1.2.5. Inspection date(s)

16.1.2.6. Location in relation to drinking water well

16.1.2.7. Location in relation to water table or surface water

16.1.3. Seek grants to initiate a pilot OSDS management program in one or more environmentally-sensitive areas, preferably within one Kent County Township or municipality (Walker, Cascade?).

16.1.4. Create educational material and programs identifying the environmental damage caused by improperly maintained or failing OSDSs. Distribute this material when creating the above-referenced data base, and by direct mail. Emphasize health and environmental effects.

16.1.5. Require connection to a public sewer for new multi-lot developments within 1,000 ft (current State law is 200 ft) of existing public sewers.

16.1.6. Require OSDS inspections at the time of property transfer or refinancing, and regular inspections of non-residential OSDSs such as those serving churches, restaurants, schools and businesses.

16.1.7. Require all new developments with 25 or more parcels to provide a professionally designed and managed community treatment and collection system. Consider allowing density bonuses for the community system approach. Also require a professionally designed and managed treatment and collection system for commercial or industrial establishments expecting daily flows in excess of 5,000 gals.

16.1.8. Define system failure (see Section 4.1)

16.1.9. Discourage chemical or other 'enhanced-treatment' additives to septic tanks.

16.1.10. Undertake a countywide planning process to identify areas likely to be served with sanitary sewers in the next 20 to 50 years, and place deed restrictions on new properties served by OSDSs in those areas to require hook-up to sewers when they become available.

16.1.11. Require all *new* OSDSs to be constructed with eventual management in mind, including:

16.1.11.1. A detailed as-built drawing of the OSDS.

16.1.11.2. Risers to the ground surface with access covers for easy inspection.

16.1.11.3. Inspection ports appropriately located in the soil absorption system to check for ponding.

16.1.11.4. Two separate sets of soil absorption systems that can be isolated by a valve in the event one drain field system is in need of repair or replacement.

16.1.11.5. Requirements for periodic inspection.

16.1.12. Encourage governments and existing septic pumpers and haulers to collaborate on ways to optimize the use of existing *private* resources to implement these recommendations.

16.2. Phase II

16.2.1. Locate potential sites for remote collection and treatment of septage by either a municipality or private company. Encourage municipal treatment providers to increase or add septage treatment facilities either on- or off-site (Kent County Landfill @ 10 Mile Road?).

16.2.2. Ban the land application of septage as soon as enough treatment capacity exists, and ban it entirely on frozen ground. In summer months, septage must be tilled or injected (incorporated) immediately after application to allow *zero* runoff to surface waters, and it must be applied at agronomic rates.

16.2.3. Educate government leaders and citizens about the state laws (503 regulations) governing septage land disposal, and give them a phone number to call to report suspected violations. Include education as part of planning process.

16.2.4. Identify sensitive or critical areas to preserve groundwater quality, and adopt strict standards for OSDSs near these areas.

16.2.5. Require septage generated in Kent County to be disposed in Kent County.

16.2.6. Create a training program and certifications for inspectors.

16.3. Phase III

16.3.1. Create a regular inspection and a minimum tank pumping cycle for any new OSDSs or improvements to existing systems permitted after the ordinance's effective date.

16.3.2. Ban the use of phosphate detergents within 1,000 feet of surface waters. Educate owners of such OSDSs about the harmful effects of phosphates on surface waters.

16.3.3. Provide utility or agency right of entry to properties for inspection purposes.

16.4. Phase IV

16.4.1. Establish a utility management fee, which every OSDS owner must pay, to adequately fund a countywide management system that oversees permitting, installation, and inspection. (e.g., with 45,000 residential septic systems in Kent County paying $10/month, the County can generate $5,400,000 to fund the management system).

16.4.2. The utility management fee would fund all inspections and record keeping required to establish a countywide management system.

16.4.3. The countywide management system (public or private) would keep central records on all OSDSs in Kent County, and be responsible and empowered to perform periodic (at least every three years) OSDS inspections.

16.4.4. Based upon inspection results, homeowners will be responsible for making and paying for any cited repairs or system replacements.

16.4.5. Place liens on properties that do not pay fees, and allow for civil violations for scofflaws.

16.4.6. To lessen the initial 'blow' to owners of existing OSDSs, consider charging graduated fees for the first five or ten years, and begin collecting full fees then or at the time of property transfer, whichever comes first.

16.4.7. Where OSDSs are continued to be allowed as they are now, establish a one-time installation fee based upon the number of units developed, and establish the monthly utility management fees described in 16.4.1

16.4.8. Consider issuing annual or periodic OSDS operating permits for those OSDSs in the management system.

16.4.9. Offer a low-interest loan or 'insurance' program for OSDS replacement for hardship cases.

17. References

Many thanks are due to the following organizations that supplied much of the technical and management material compiled in this report:

1. United States Environmental Protection Agency, Washington, D.C.
2. National Small Flows Clearing House, Morgantown, WV
3. Tetra Tech, Fairfax, VA
4. National On-Site Wastewater Recycling Association
5. U.S. Census, 1990
6. Kent County Health Department, Grand Rapids, MI
7. Michigan Department of Environmental Quality, Lansing and Grand Rapids, MI
8. The Ohio State University Extension Service, Columbus, OH
9. Kent County, Michigan; Urban Sprawl Subcommittee Report, 2001